Annex 2
Technical drawings
"Metal Structures of a Piggyback Railcar"
Identification No. RS/ERAT/2020/1

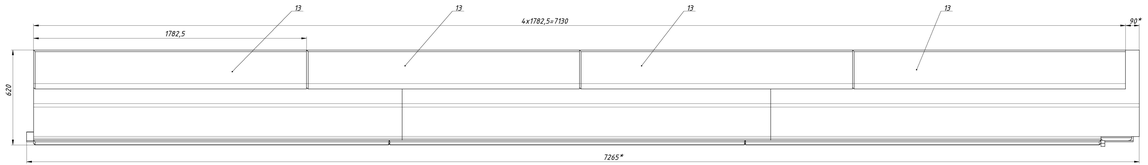

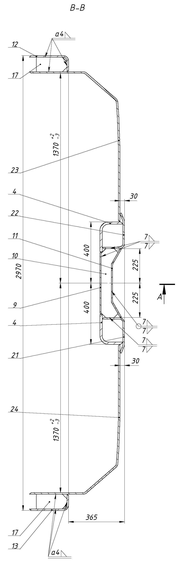

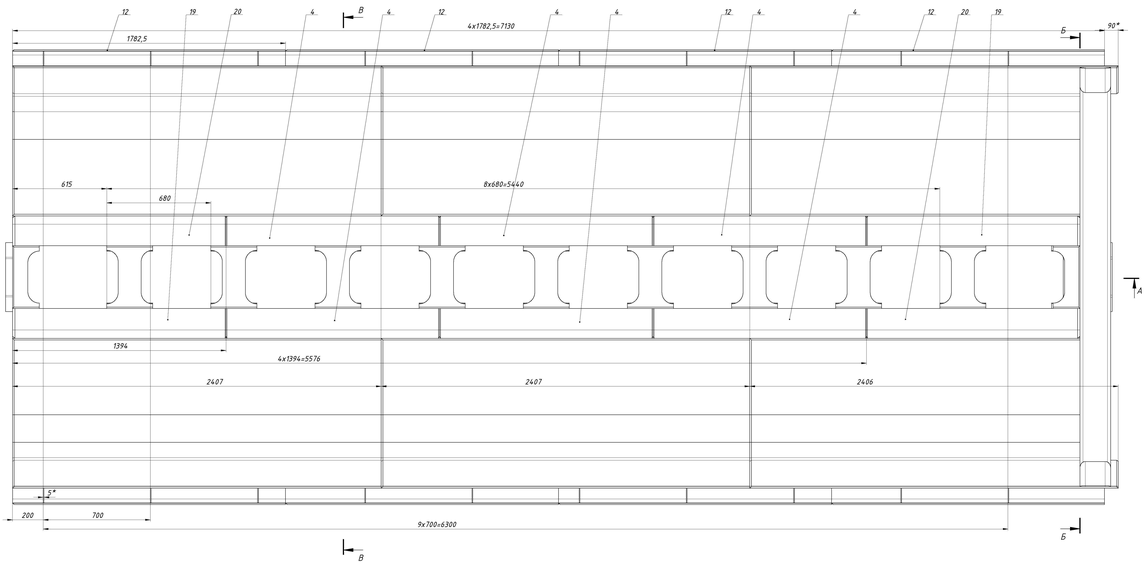

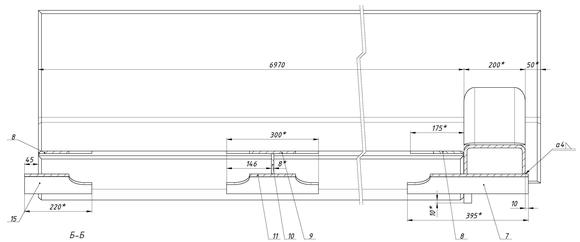

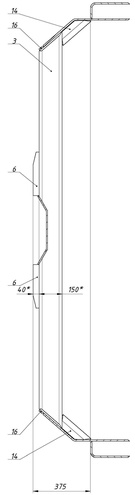

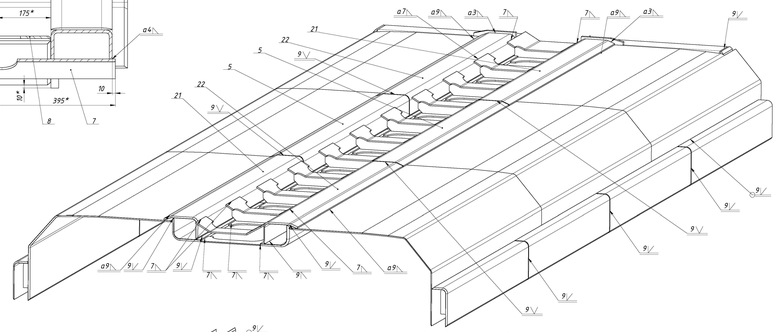

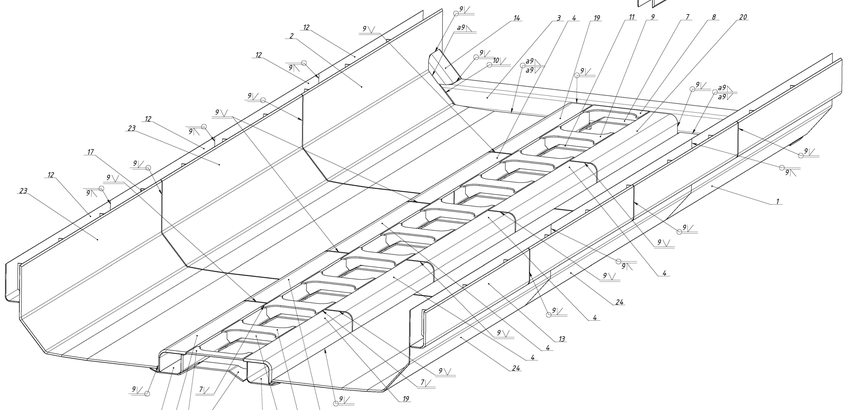

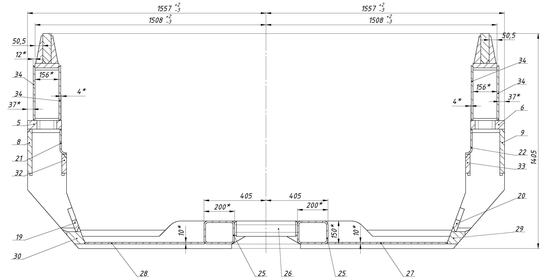
1557
1508
405
200
14,05

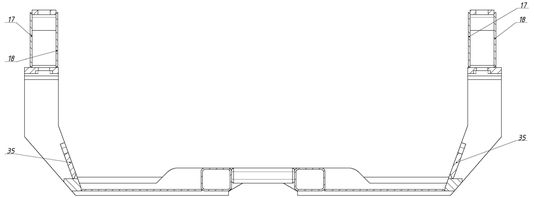

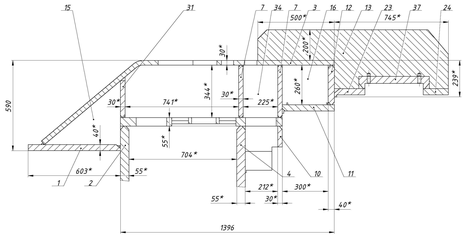
590
741
704
603
1396

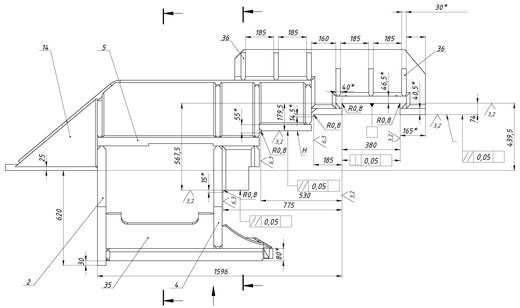
185
160
775
930
1596
439,5

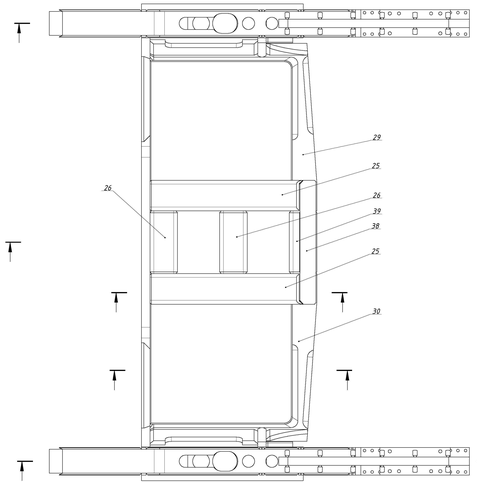

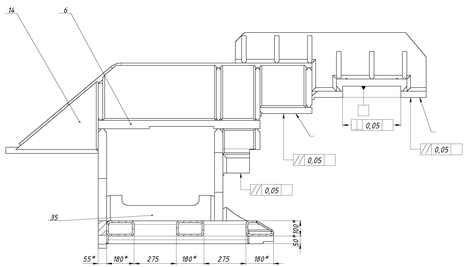
180
275
1596

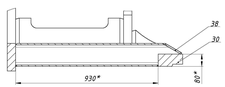
930

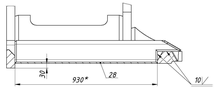
930
28

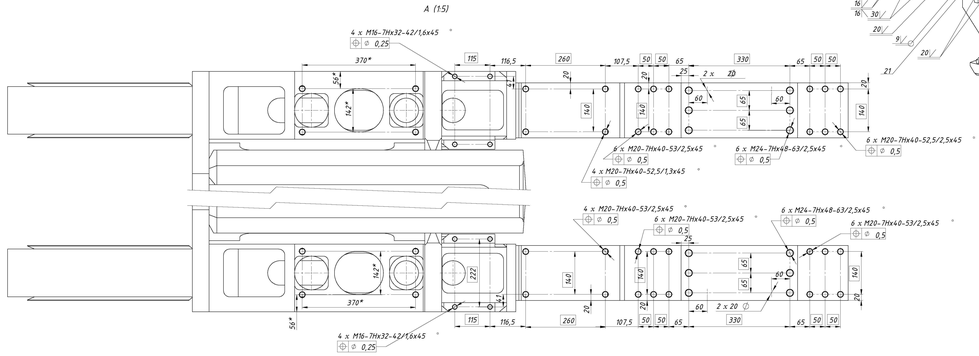
4 x M16-7Hx32-42/1,6x45
370
116,5
260
107,5
2 x 20
6 x M20-7Hx40-53/2,5x45
6 x M24-7Hx48-63/2,5x45
6 x M20-7Hx40-52,5/2,5x45
4 x M20-7Hx40-52,5/1,3x45

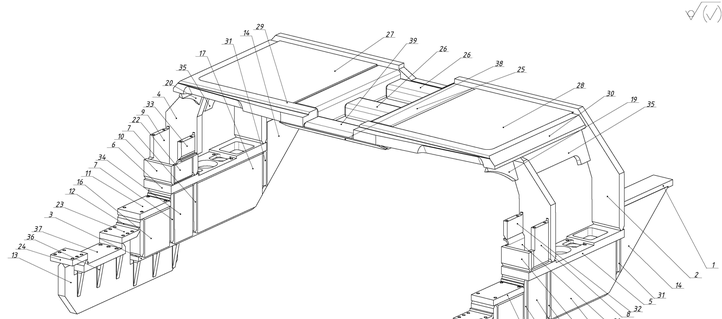

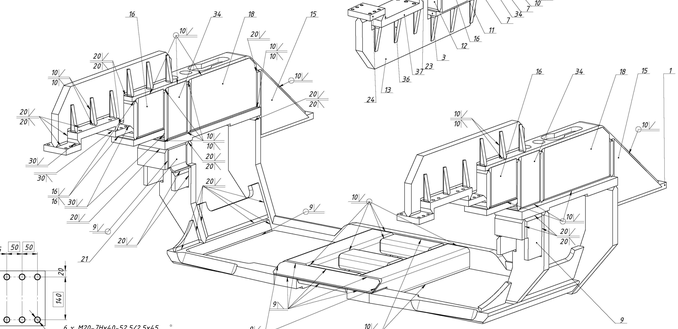

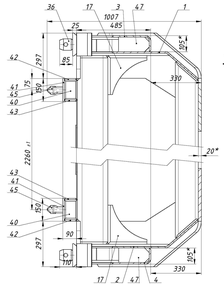

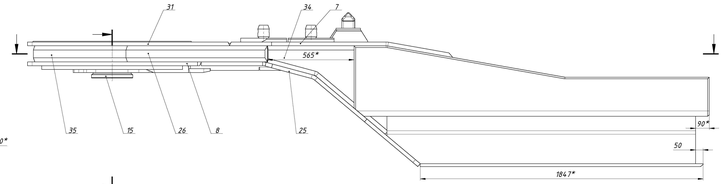

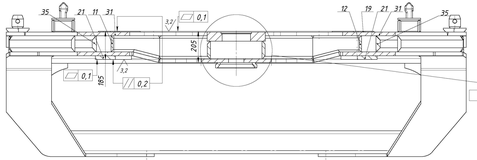

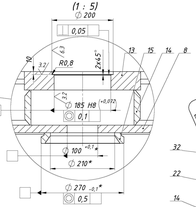
(1 : 5)

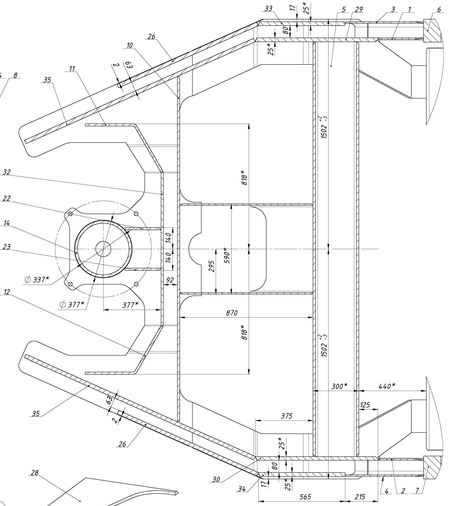

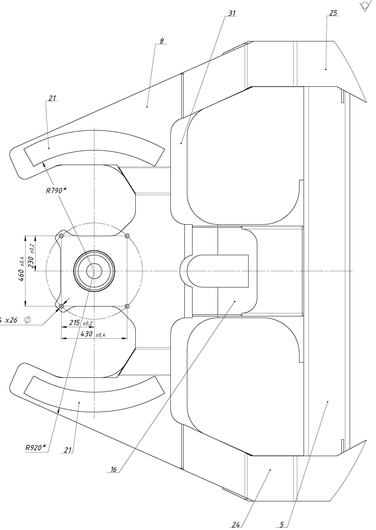

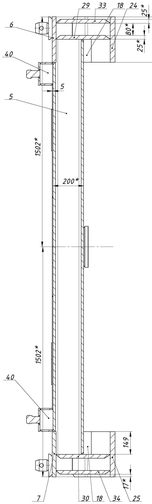

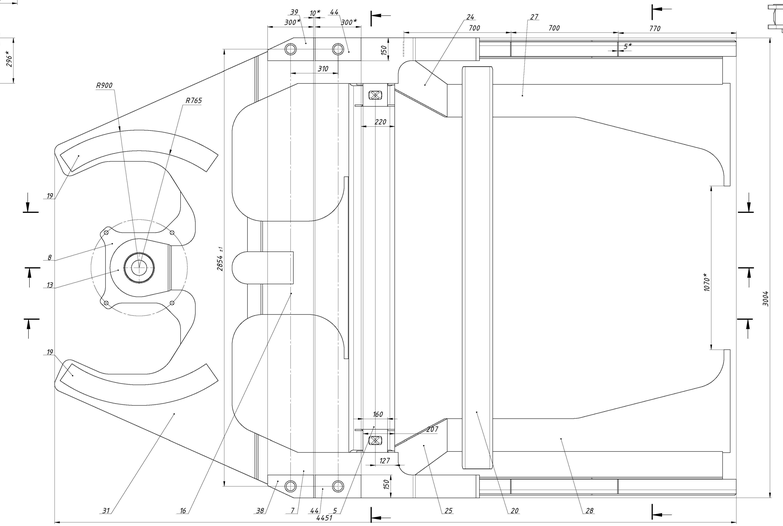

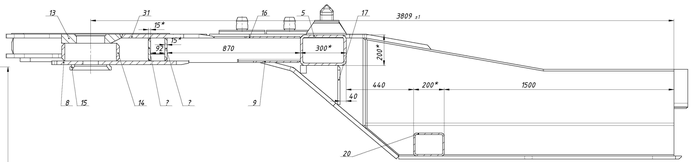

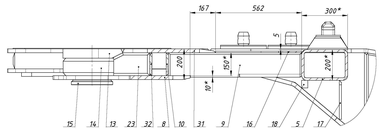

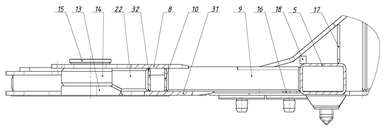

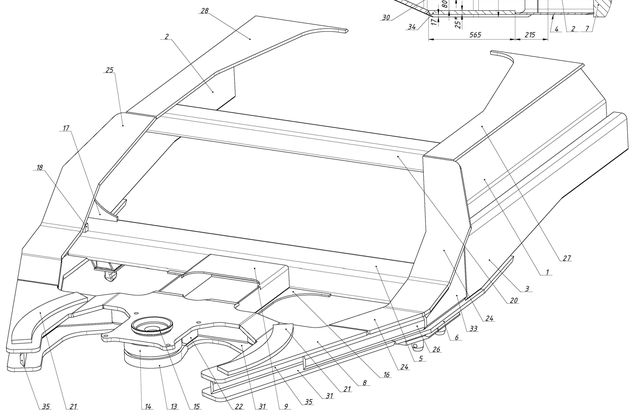

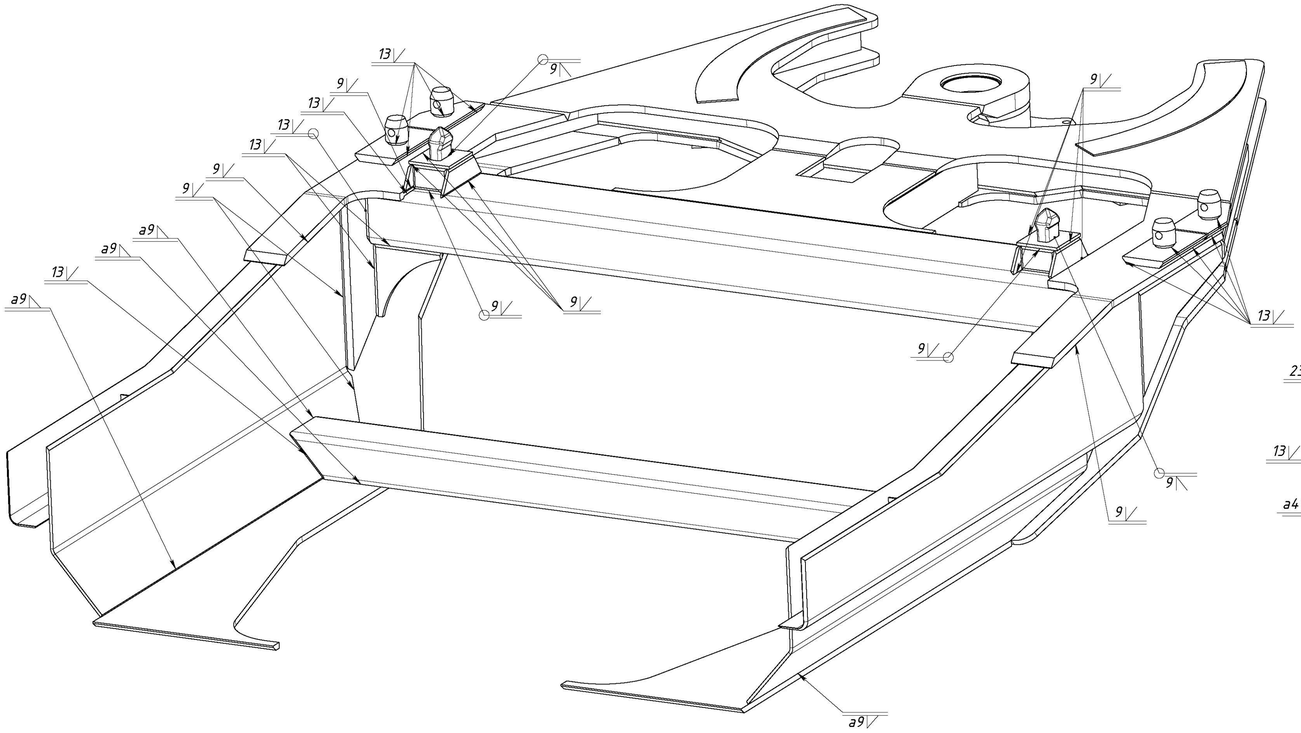
13
9
13
13
13
9
9
a9
a9
13
a9
9
9
9
9
9
9
13
a9

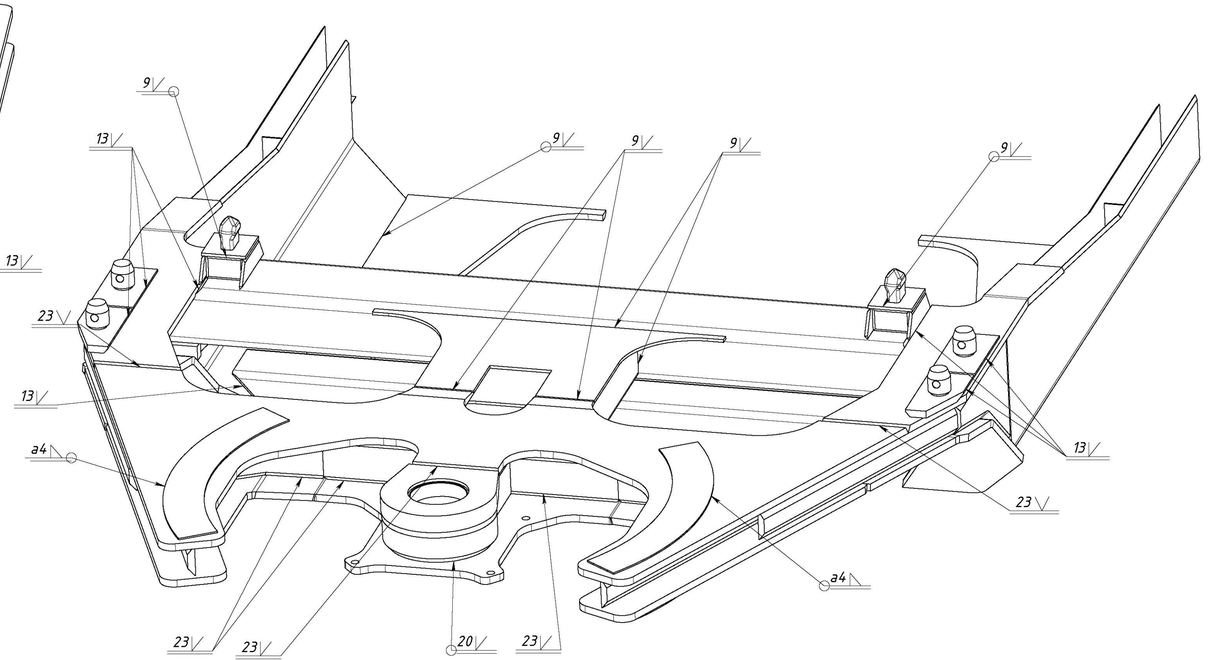
9
13
9
9
9
9
23
13
a4
13
23
a4
23
23
20
23

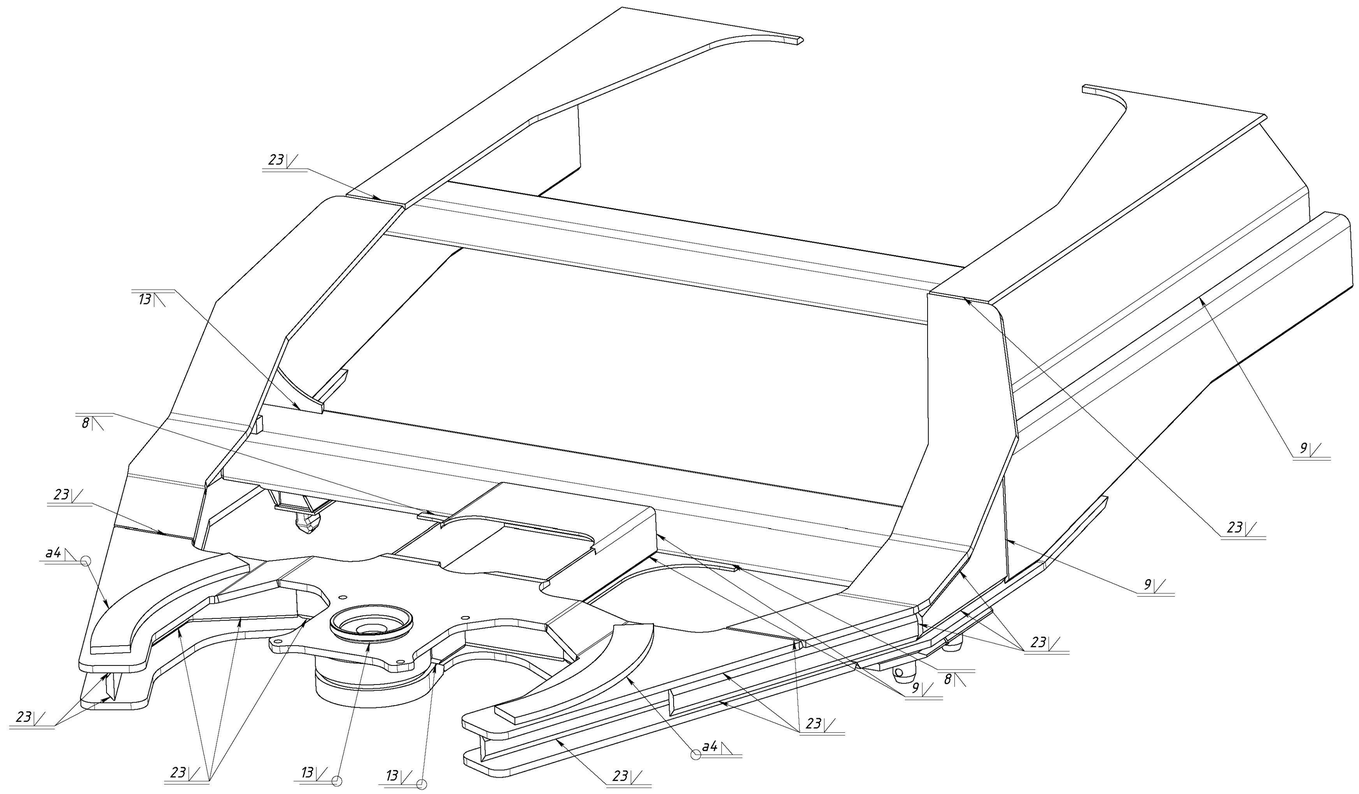
23
13
8
23
a4
23
23
13
13
23
a4
23
9
23
9
23
8
9