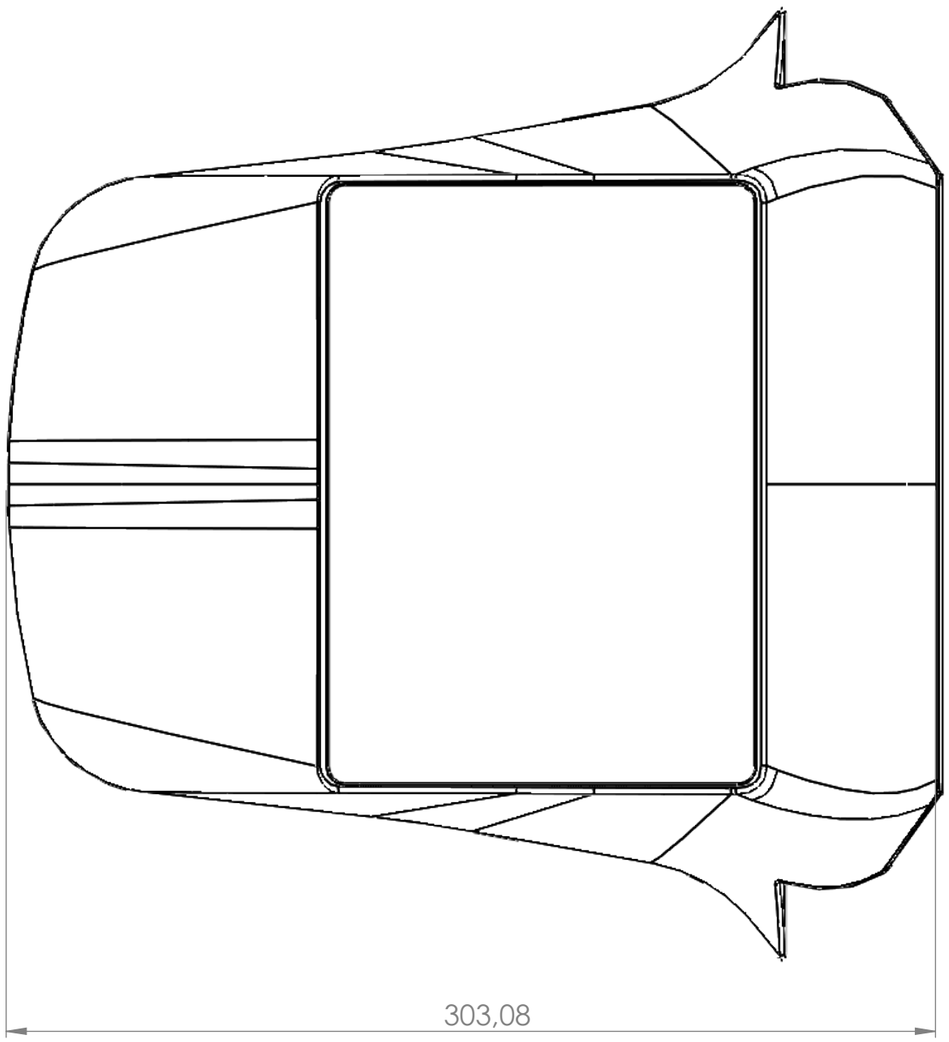

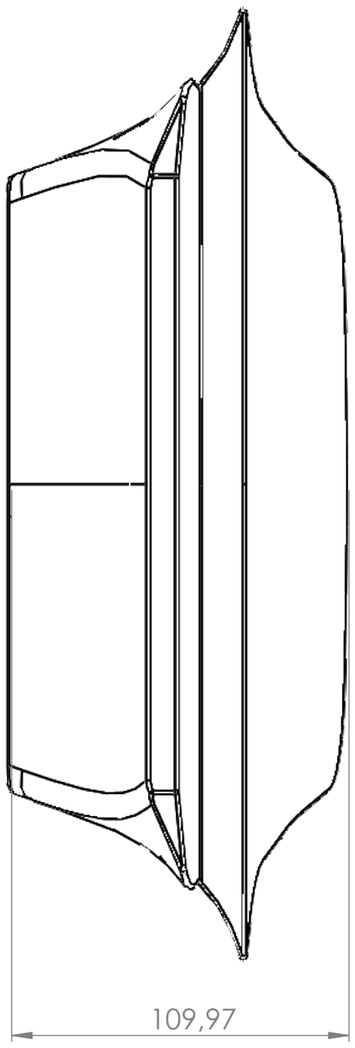

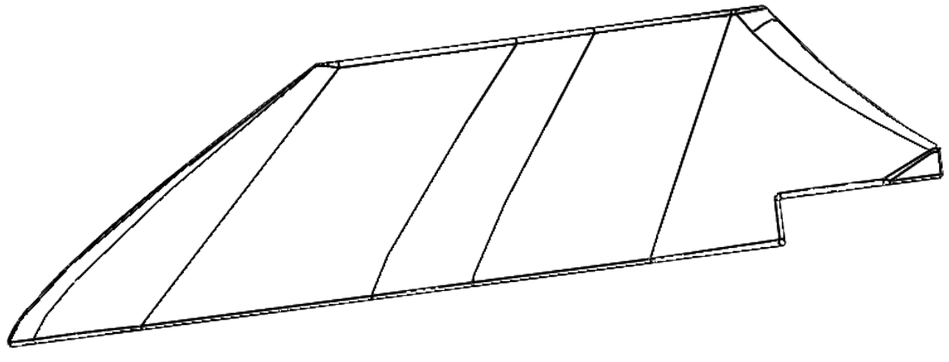

UNLESS OTHERWISE SPECIFIED: DIMENSIONS ARE IN MILLIMETERS SURFACE FINISH: TOLERANCES: LINEAR: ANGULAR:		FINISH:			DEBURR AND BREAK SHARP EDGES	DO NOT SCALE DRAWING	REVISION
	NAME	SIGNATURE	DATE			TITLE: Aizmugurējā displeja konsole	
DRAWN							
CHK'D							
APPV'D							
MFG							
Q.A				MATERIAL:		DWG NO.	A3
				WEIGHT:		SCALE:1:5	SHEET 1 OF 1

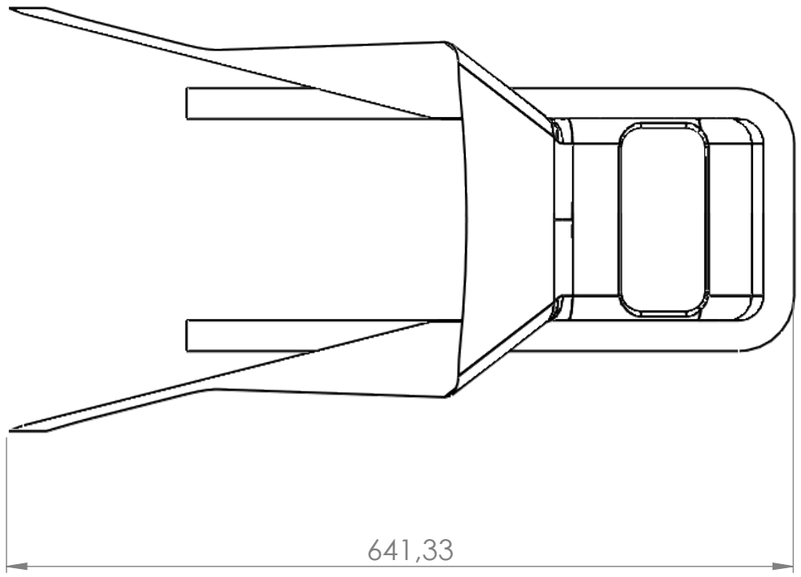

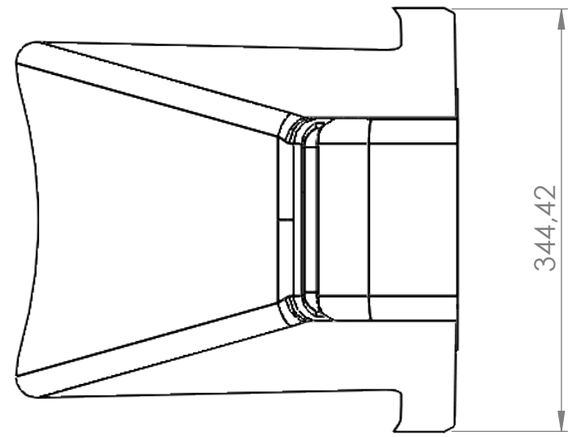

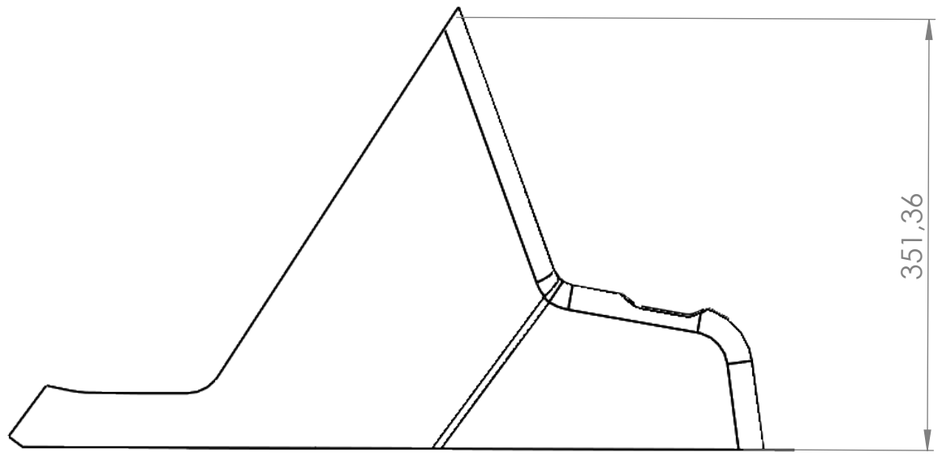

UNLESS OTHERWISE SPECIFIED: DIMENSIONS ARE IN MILLIMETERS SURFACE FINISH: TOLERANCES: LINEAR: ANGULAR:		FINISH:			DEBURR AND BREAK SHARP EDGES	DO NOT SCALE DRAWING	REVISION
	NAME	SIGNATURE	DATE			TITLE: Aizmugurējā konsole	
DRAWN							
CHK'D							
APPV'D							
MFG							
Q.A				MATERIAL:		DWG NO.	A3
				WEIGHT:		SCALE:1:10	SHEET 1 OF 1

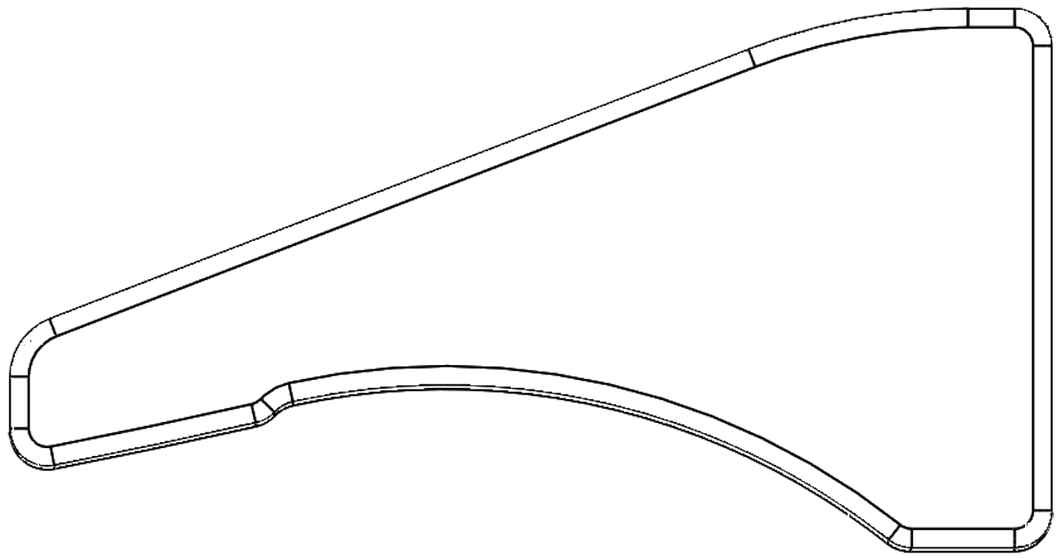

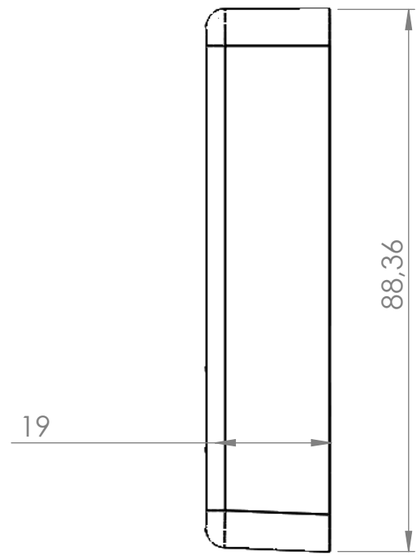

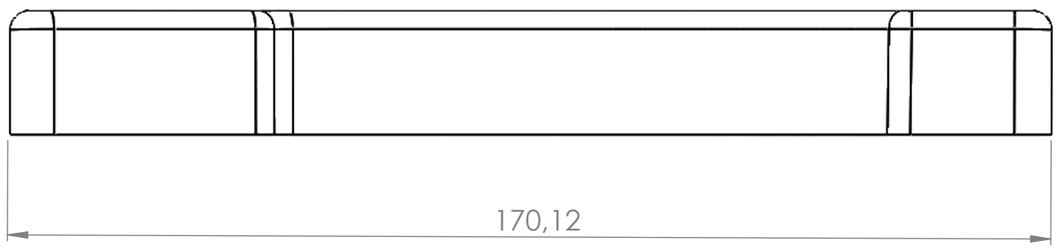

Kreisā aizmugurējā trīsstūrveida pastiprinošā riba ir spoguļattēlā

UNLESS OTHERWISE SPECIFIED: DIMENSIONS ARE IN MILLIMETERS SURFACE FINISH: TOLERANCES: LINEAR: ANGULAR:		FINISH:			DEBURR AND BREAK SHARP EDGES		DO NOT SCALE DRAWING	REVISION
	NAME	SIGNATURE	DATE				TITLE: Labā aizmugurējā trīsstūrveida pastiprinošā riba	
DRAWN								
CHK'D								
APPV'D								
MFG								
Q.A				MATERIAL:			DWG NO.	A3
				WEIGHT:			SCALE:1:2	SHEET 1 OF 1

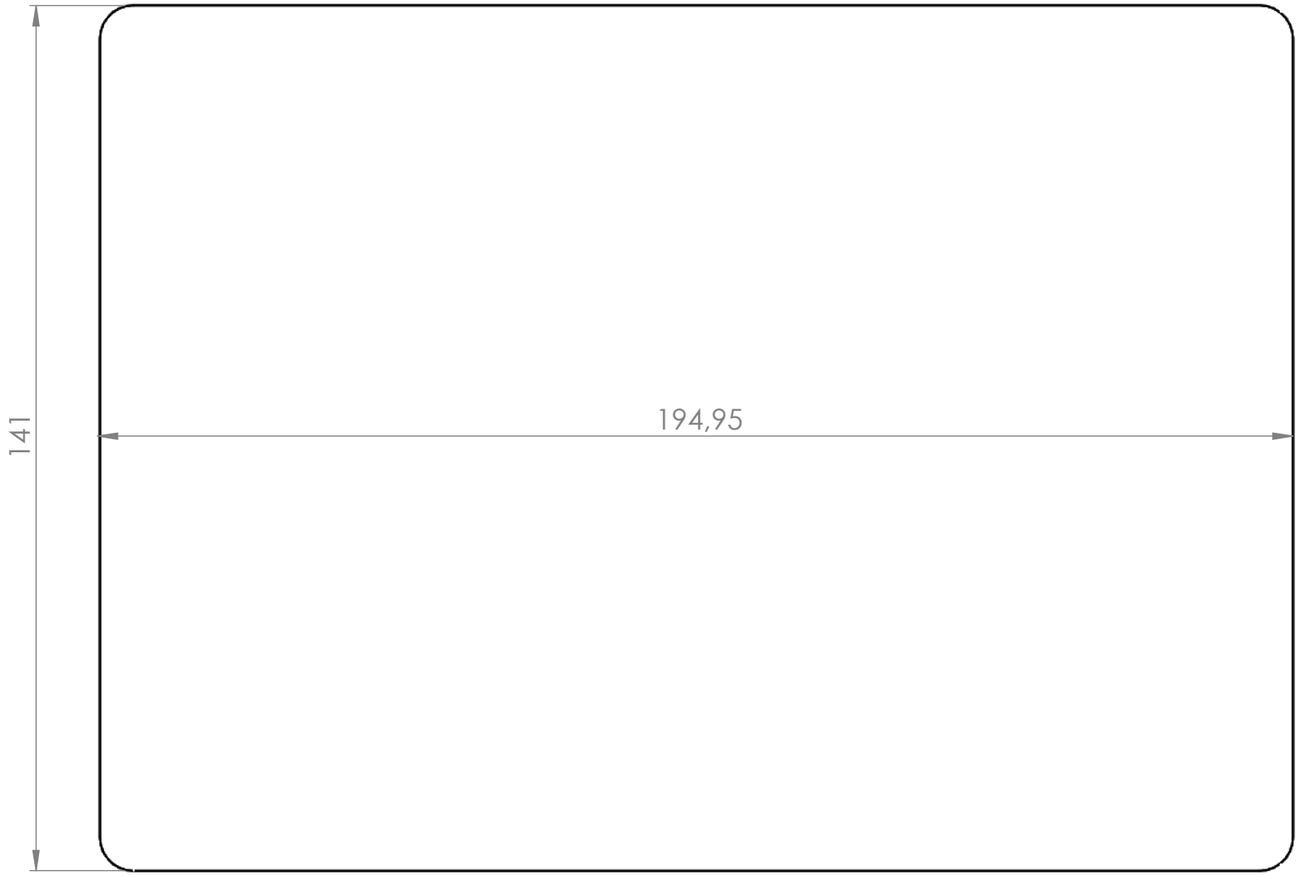

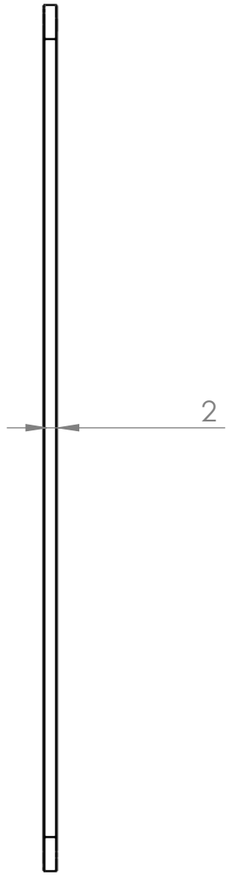

UNLESS OTHERWISE SPECIFIED: DIMENSIONS ARE IN MILLIMETERS SURFACE FINISH: TOLERANCES: LINEAR: ANGULAR:	FINISH:				DEBURR AND BREAK SHARP EDGES	DO NOT SCALE DRAWING	REVISION
	NAME	SIGNATURE	DATE			TITLE: Aizmugurējās displeja konsoles panelis	
DRAWN							
CHK'D							
APPV'D							
MFG							
Q.A				MATERIAL:		DWG NO.	A3
				WEIGHT:		SCALE:1:1	SHEET 1 OF 1

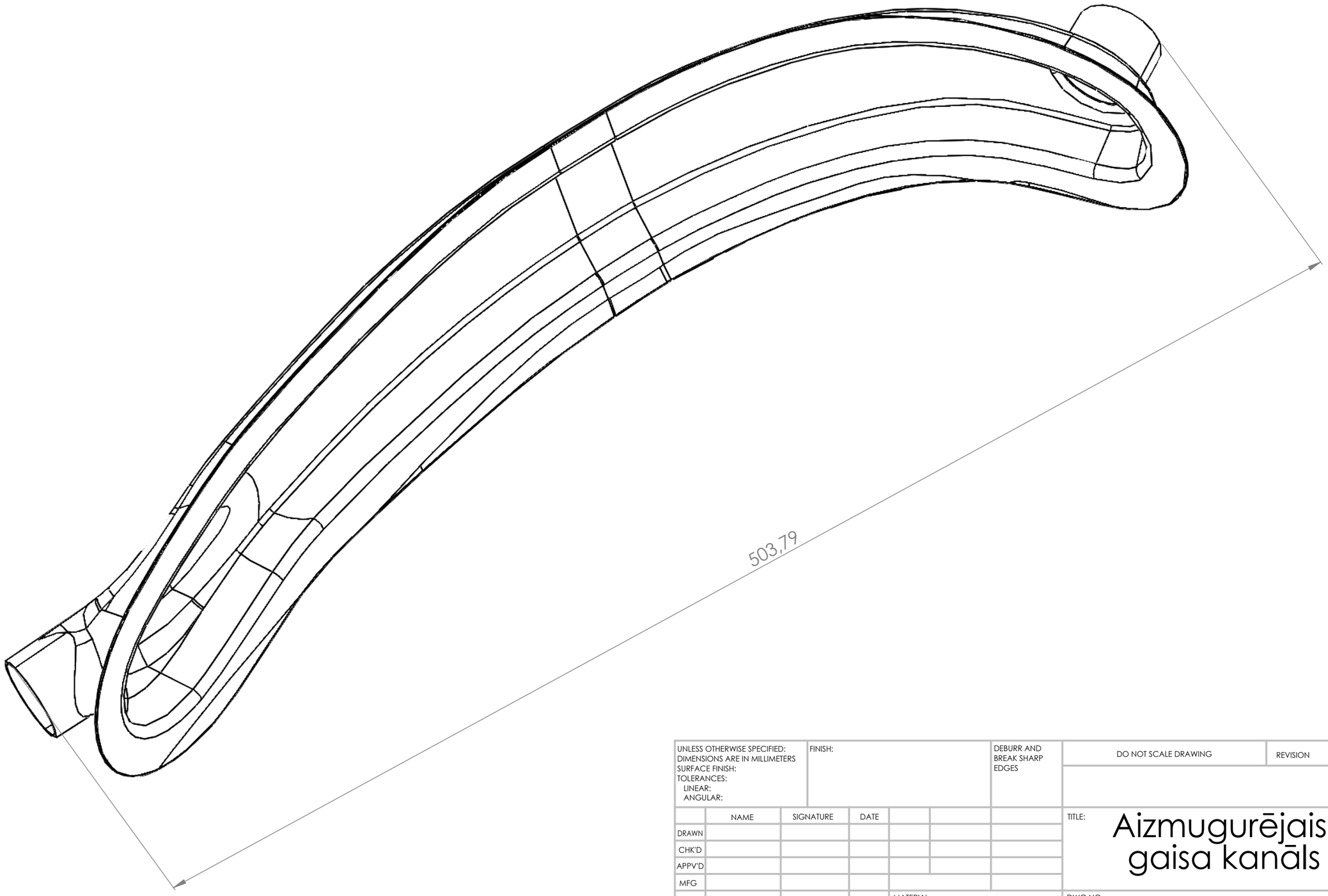

UNLESS OTHERWISE SPECIFIED: DIMENSIONS ARE IN MILLIMETERS SURFACE FINISH: TOLERANCES: LINEAR: ANGULAR:		FINISH:		DEBURR AND BREAK SHARP EDGES		DO NOT SCALE DRAWING	REVISION
	NAME	SIGNATURE	DATE			TITLE: Aizmugurējais gaisa kanāls	
DRAWN							
CHK'D							
APPV'D							
MFG							
Q.A				MATERIAL:		DWG NO.	A3
				WEIGHT:		SCALE:1:5	SHEET 1 OF 1

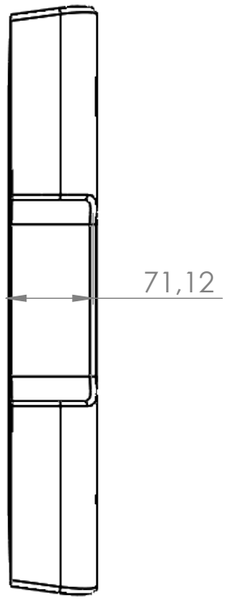

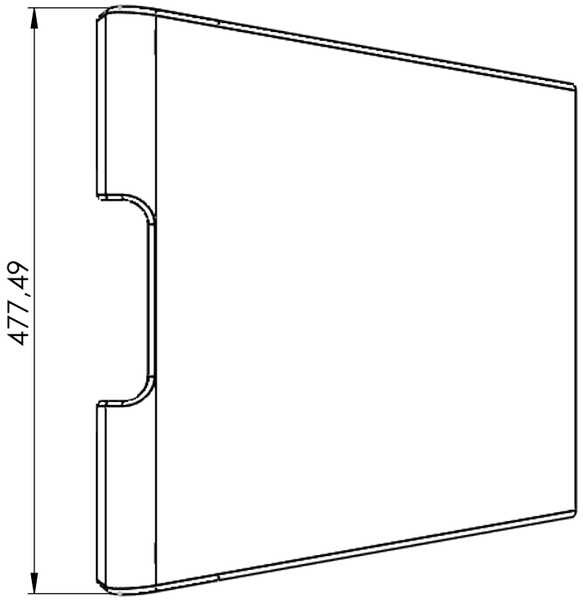

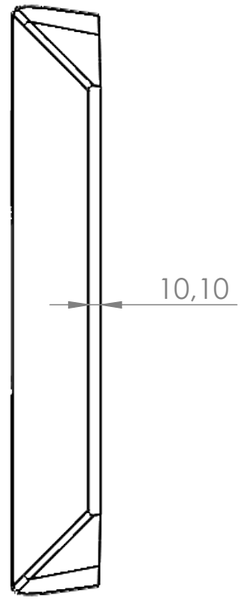

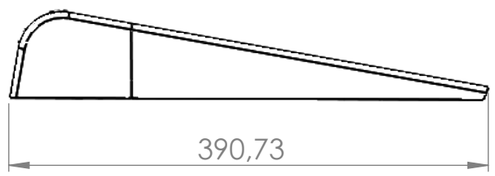

UNLESS OTHERWISE SPECIFIED: DIMENSIONS ARE IN MILLIMETERS SURFACE FINISH: TOLERANCES: LINEAR: ANGULAR:		FINISH:			DEBURR AND BREAK SHARP EDGES	DO NOT SCALE DRAWING	REVISION
	NAME	SIGNATURE	DATE			TITLE: Aizmugurējais sēdeklis	
DRAWN							
CHK'D							
APPV'D							
MFG							
Q.A				MATERIAL:		DWG NO.	A3
				WEIGHT:		SCALE:1:5	SHEET 1 OF 1

Kreisā aizplākšņa A riba	rasējumā
Labā aizplākšņa A riba	pretēji

DATE	REV	AUTHOR	DESCRIPTION
20/06/2012	01	MM	SHAPE MODIFICATION

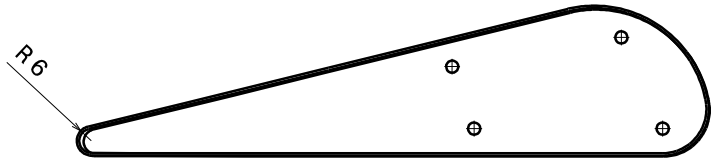

VIEW INSIDE
Scale: 1:2

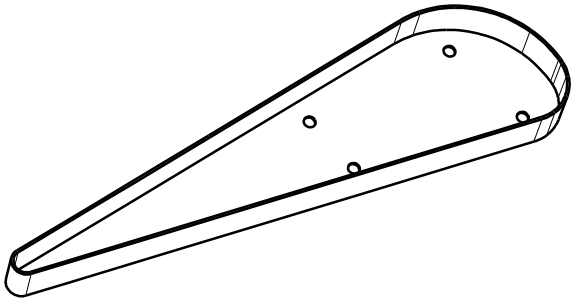

ISO VIEW
Scale: 1:2

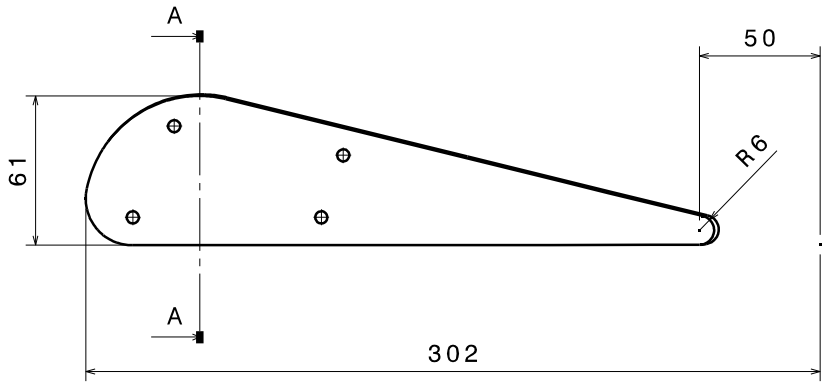

VIEW OUTSIDE
Scale: 1:2

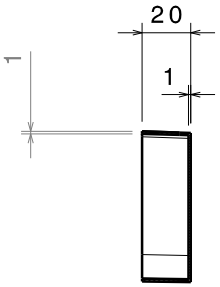

VIEW SECTION: A-A
Scale: 1:2

CAD SYSTEM: CATIA V5	FIRST ANGLE ROTATION	Aizplākšņa A riba	DWG: SEE TABLE
DRAWN:	DATE		SCALE: 1:2 SHEET: 2/4 SIZE: A3
CHECKED:	DATE		REV.
STRESS:	DATE		
CFG:	DATE		
SYSTEM:	DATE	QUANTITY: 1 RIGHT+ 1 LEFT	GEOMETRICAL TOLERANCES:ISO-22768-1-v
MATERIALS:CARBON FIBER	DATE	IDENTIFY:	DIMENSIONALTOLERANCES:ISO-22768-1
PROCESSES:	DATE	RIVETS INST:	ROUGHNESS:
APPROVED:	DATE	BOLT INST:	REMOVE ALL SHARP EDGES R=0.2-0.4
AUTHORIZED:	DATE	BUSHING/BEARING INST.:	REF. 3D FILE: XX-

This drawing is SIA PELEGRIN property and cannot be used in any way without written authorization

DATE	REV	AUTHOR	DESCRIPTION

Kreisā aizplākšņa aptecētāja gala riba	rasējumā
Labā aizplākšņa aptecētāja gala riba	pretēji

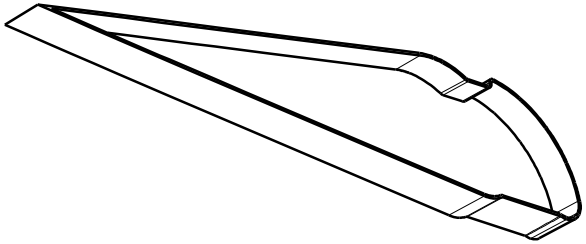

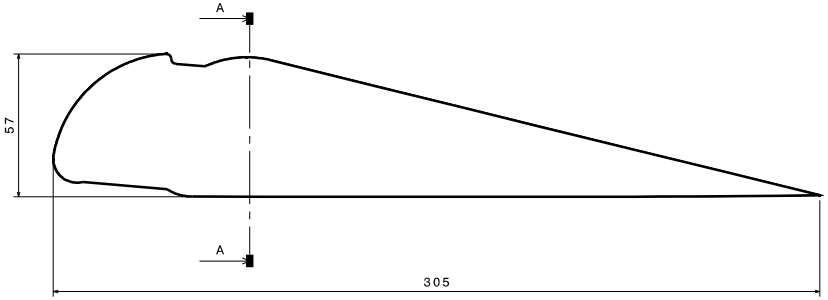

VIEW OUTSIDE
Scale: 1:1

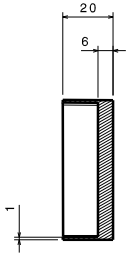

VIEW SECTION: A-A
Scale: 1:1

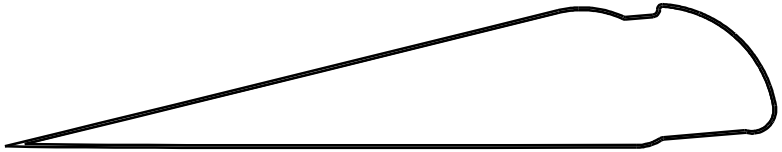

VIEW INSIDE
Scale: 1:1

CAD SYSTEM: CATIA V5	SHORT ANGLE ROTATION	Aizplākšņa aptecētāja gala riba	DWG SEE TABLE
DRAWN:	DATE		SCALE: 1:1 SHEET: 1 / 1 SIZE: A1
CHECKED:	DATE		REV
STRESS:	DATE		
CFD:	DATE		
SYSTEM:	DATE	QUANTITY: 1 RIGHT+1 LEFT	GEOMETRICAL TOLERANCES: ISO 22768-1-K
MATERIALS: CARBON FIBER	DATE	IDENTIFY:	DIMENSIONAL TOLERANCES: ISO 22768-1
PROCESSES:	DATE	RIVETS INST:	ROUGHNESS:
APPROVED:	DATE	BOLT INST:	REMOVE ALL SHARP EDGES R=2.0-0.4
AUTHORIZED:	DATE	REMOVE/READING TAT.:	REF: 3D FILE: X-

This drawing is RZA PILSGRIN property and cannot be used in any way without written authorization

DATE	REV	AUTHOR	DESCRIPTION

Kreisā aizplākšņa aptecētāja pamata riba	rasējumā
Labā aizplākšņa aptecētāja pamata riba	pretēji

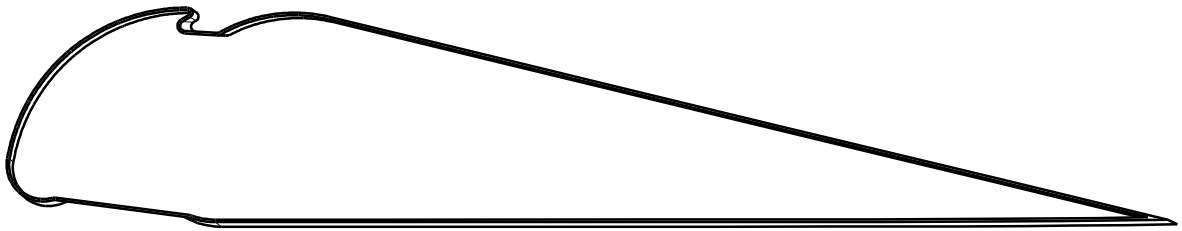

VIEW INSIDE
Scale: 1:1

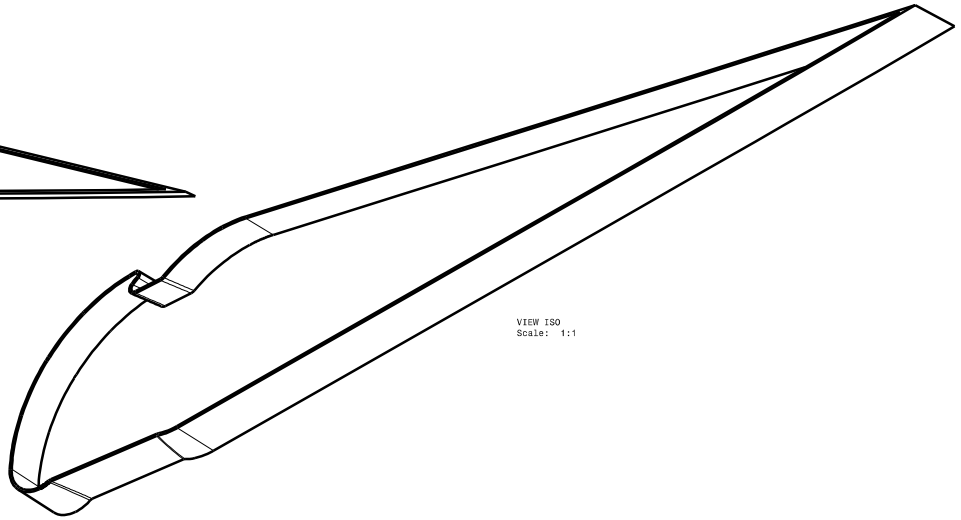

VIEW ISO
Scale: 1:1

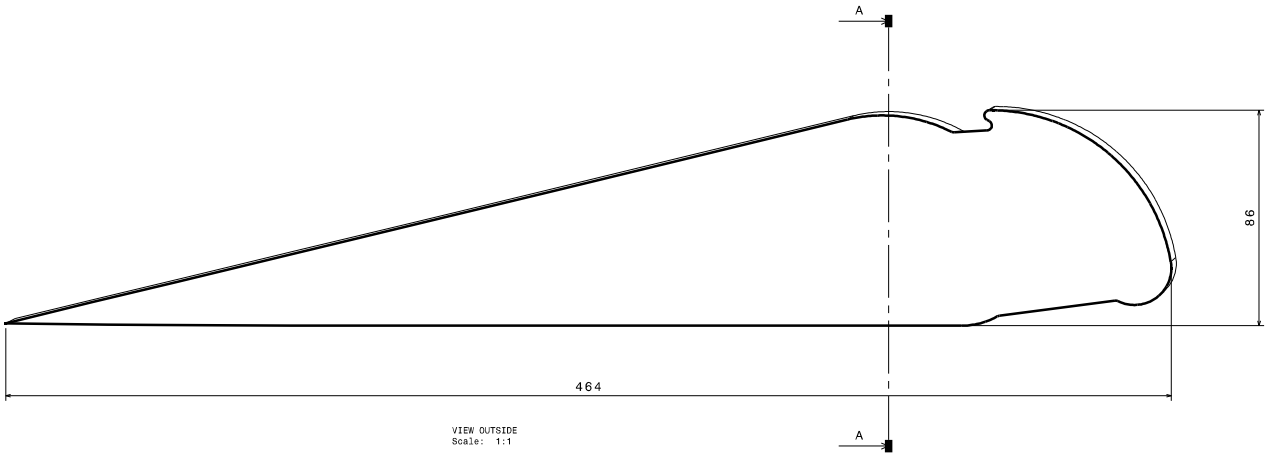

VIEW OUTSIDE
Scale: 1:1

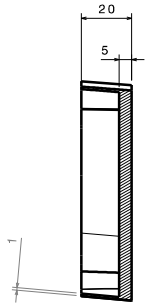

VIEW SECTION: A-A
Scale: 1:1

CAD SYSTEM: CATIA V5		Aizplākšņa aptecētāja pamata riba	DWG SEE TABLE
DRAWN:	DATE		SCALE: 1:1 SHEET: 1/1 SIZE: A1
CHECKED:	DATE		REV
STRESS:	DATE		
CFG:	DATE		
SYSTEM:	DATE	QUANTITY: 1 KIBHT=1 LEFT	GEOMETRICAL TOLERANCES:ISO-22768-1-V
MATERIALS: CARBON FIBER	DATE	IDENTIFY:	DIMENSIONAL TOLERANCES:ISO-22768-1
PROCESSES:	DATE	RIVETS INST:	ROUGHNESS:
APPROVED:	DATE	BOLT INST:	REMOVE ALL SHARP EDGES R=0.2-0.4
AUTHORIZED:	DATE	REMOVE/REARTHS INST.:	REF. 3D FILE: XX-

This drawing is SIA PELEGRIN property and cannot be used in any way without written authorization

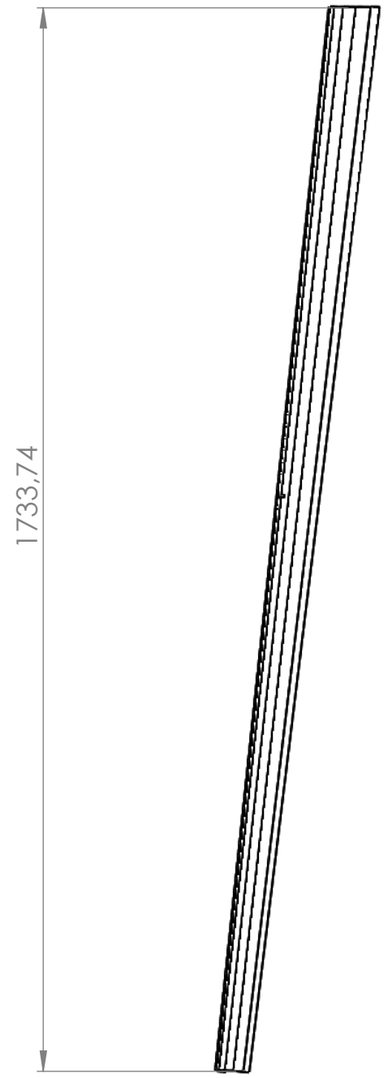

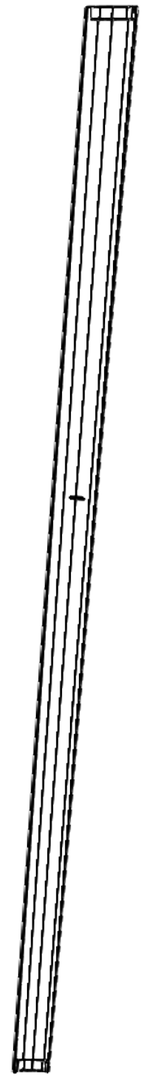

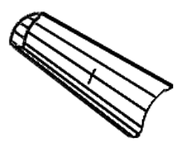

Labā aizplākšņa aptecētājs ir spoguļattēlā

UNLESS OTHERWISE SPECIFIED: DIMENSIONS ARE IN MILLIMETERS SURFACE FINISH: TOLERANCES: LINEAR: ANGULAR:		FINISH:		DEBURR AND BREAK SHARP EDGES		DO NOT SCALE DRAWING	REVISION
	NAME	SIGNATURE	DATE			TITLE: Kreisā aizplākšņa aptecētājs	
DRAWN							
CHK'D							
APPV'D							
MFG							
Q.A				MATERIAL:		DWG NO.	A3
				WEIGHT:		SCALE:1:20	SHEET 1 OF 1

Kreisā aizplākšņa čaula	rasējumā
Labā aizplākšņa čaula	pretēji

DATE	REV	AUTHOR	DESCRIPTION

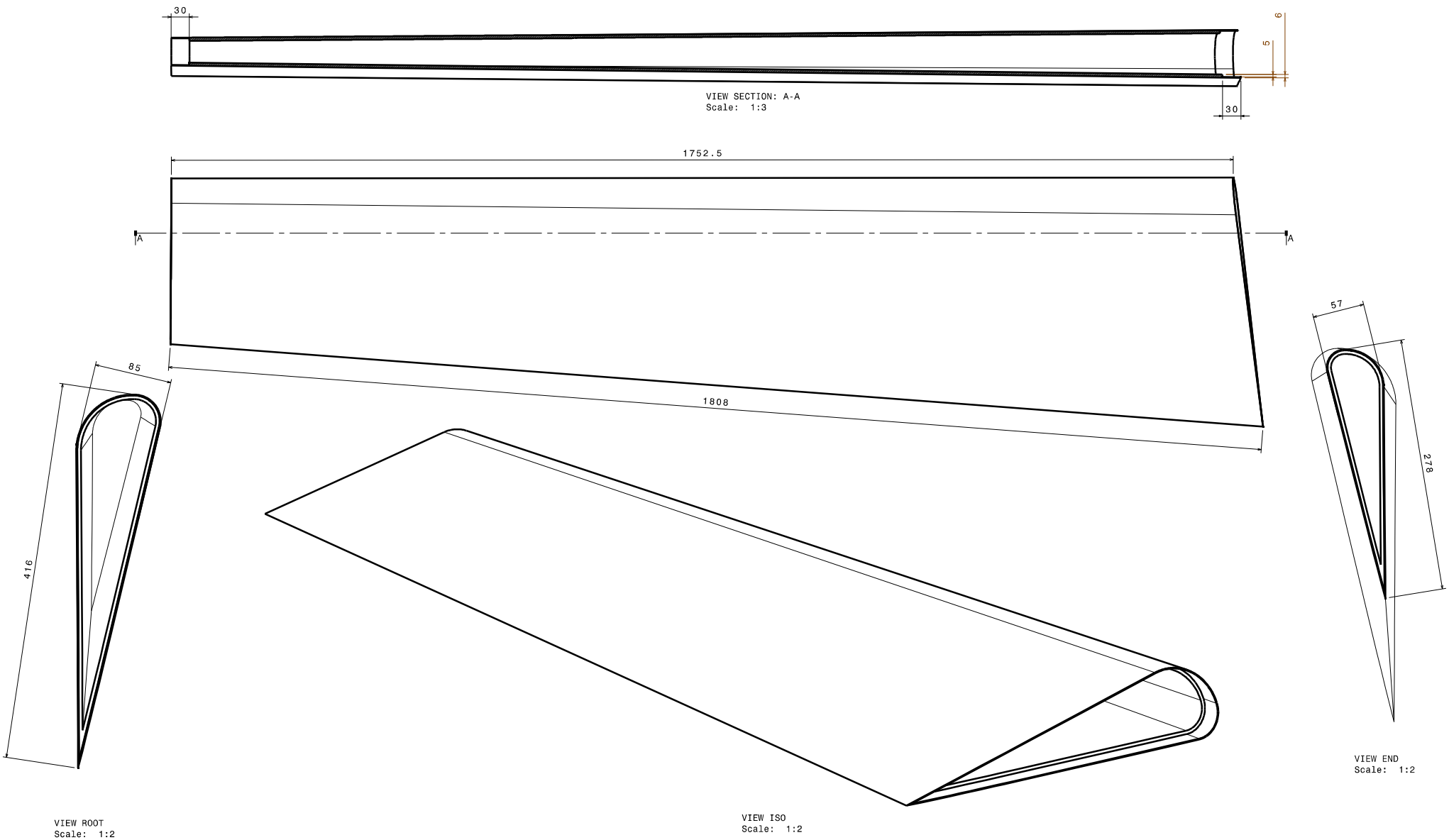

CAD SYSTEM: CATIA V5	FIRST ANGLE ROTATION	Aizplākšņa čaula	DWG SEE TABLE
DRAWN:	DATE		SCALE: 1:2 SHEET:1/1 SIZE: A1
CHECKED:	DATE		REV.
STRESS:	DATE		
CFG:	DATE		
SYSTEM:	DATE	QUANTITY: 1+1	
MATERIALS: CARBON FIBER	DATE	IDENTIFY:	TOLERANCES:
PROCESSES:	DATE	FEMOVE ALL SHARP EDGES 0+0.2-0.4	RIVETS INST:
APPROVED:	DATE	ROUGHNESS:	BOLT INST:
AUTHORIZED:	DATE	BEDROVG/BEARING INST.:	REF. 3D FILE: XX-

This drawing is S.I.A.PELEGRIN property and cannot be used in any way without written authorization

Kreisā aizplākšņa gala riba	rasējumā
Labā aizplākšņa gala riba	pretēji

DATE	REV	AUTHOR	DESCRIPTION
20/06/2012	01	MM	SHAPE MODIFICATION

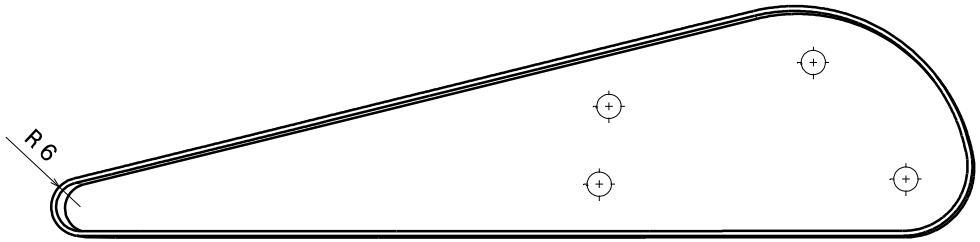

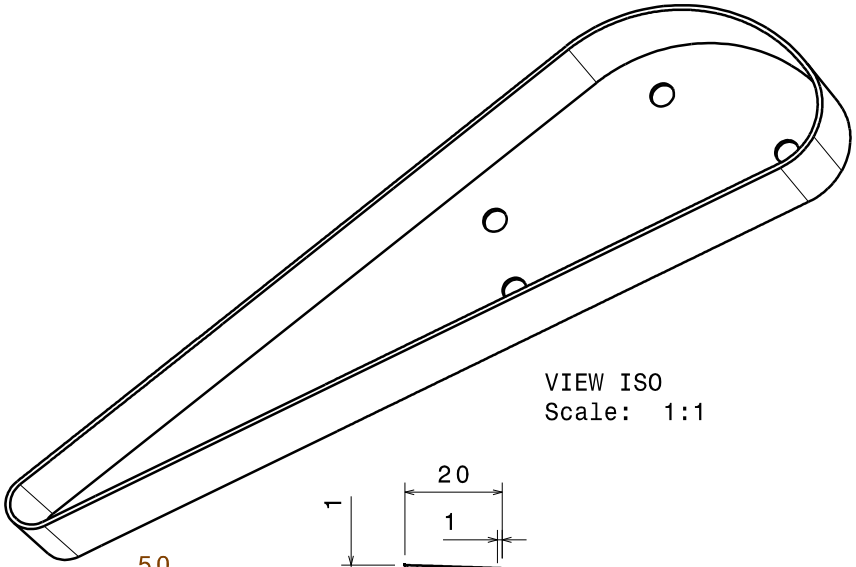

VIEW ISO
Scale: 1:1

VIEW INSIDE
Scale: 1:1

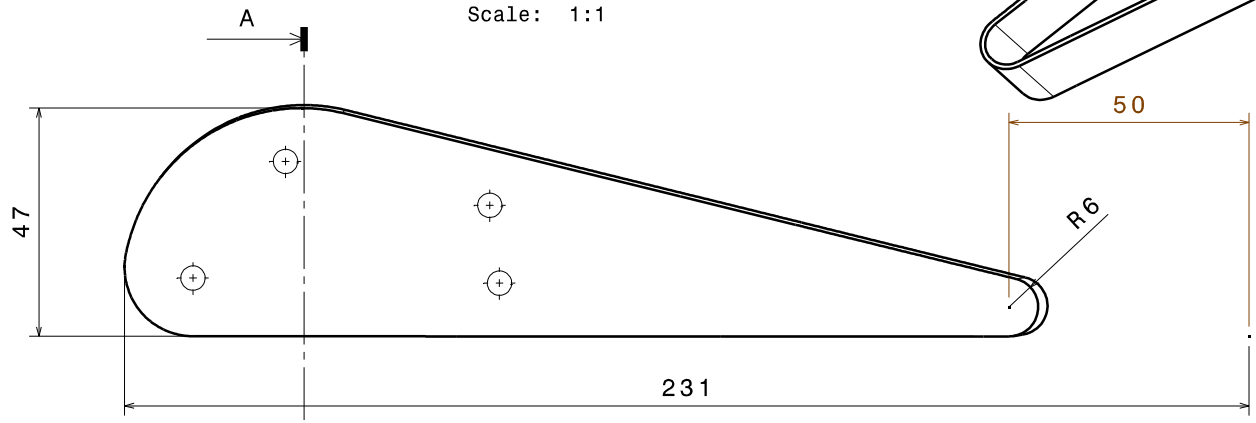

VIEW OUTSIDE
Scale: 1:1

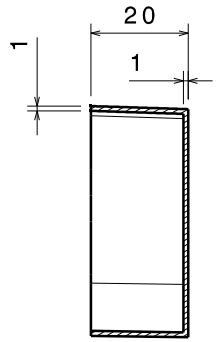

VIEW SECTION: A-A
Scale: 1:1

CAD SYSTEM: CATIA V5	FIRST ANGLE ROTATION	Aizplākšņa gala riba	DWG: SEE TABLE
DRAWN:	DATE		SCALE: 1:1 SHEET: 2/4 SIZE: A3
CHECKED:	DATE		REV.
STRESS:	DATE		
CFG:	DATE		
SYSTEM:	DATE	QUANTITY: 1LEFT+ 1RIGHT	GEOMETRICAL TOLERANCES:ISO-22768-1-v
MATERIALS:CARBON FIBER	DATE	IDENTIFY:	DIMENSIONALTOLERANCES:ISO-22768-1
PROCESSES:	DATE	RIVETS INST:	ROUGHNESS:
APPROVED:	DATE	BOLT INST:	REMOVE ALL SHARP EDGES R=0.2-0.4
AUTHORIZED:	DATE	BUSHING/BEARING INST.:	REF. 3D FILE: XX-

This drawing is SIA PELEGRIN property and cannot be used in any way without written authorization

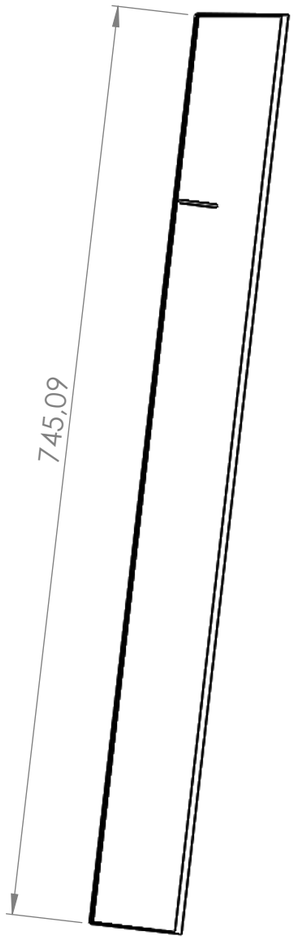

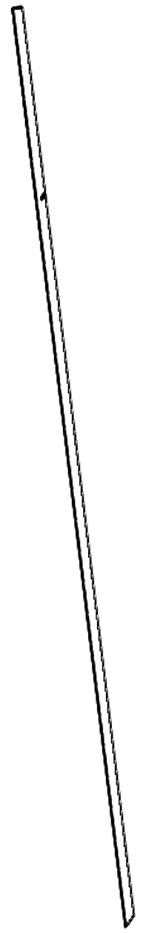

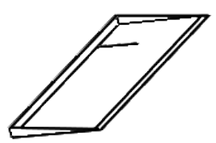

UNLESS OTHERWISE SPECIFIED: DIMENSIONS ARE IN MILLIMETERS SURFACE FINISH: TOLERANCES: LINEAR: ANGULAR:		FINISH:			DEBURR AND BREAK SHARP EDGES	DO NOT SCALE DRAWING	REVISION
	NAME	SIGNATURE	DATE			TITLE: Apakšējā trimera čaula	
DRAWN							
CHK'D							
APPV'D							
MFG							
Q.A				MATERIAL:		DWG NO.	A3
				WEIGHT:		SCALE:1:10	SHEET 1 OF 1

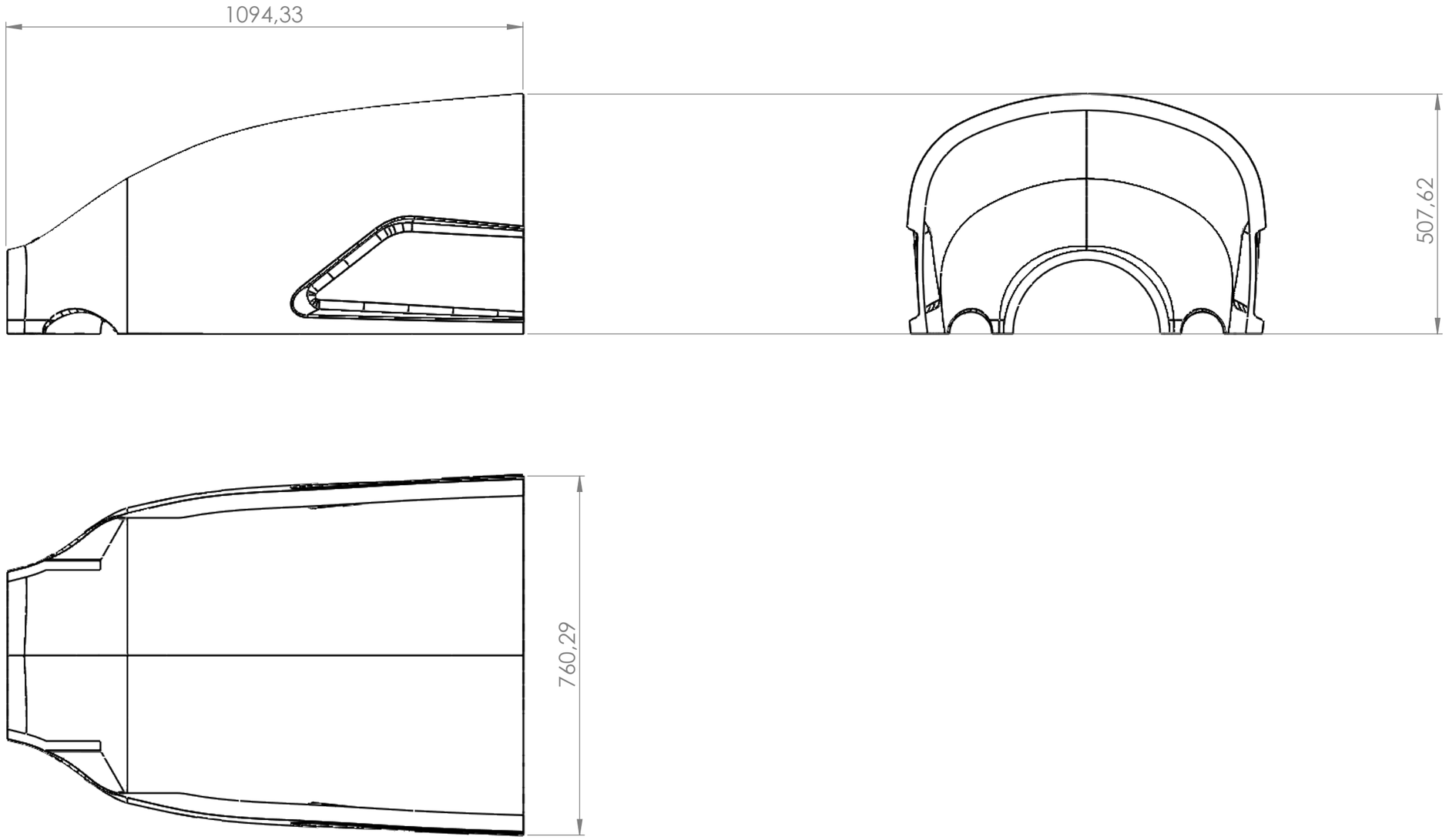

UNLESS OTHERWISE SPECIFIED: DIMENSIONS ARE IN MILLIMETERS SURFACE FINISH: TOLERANCES: LINEAR: ANGULAR:		FINISH:		DEBURR AND BREAK SHARP EDGES		DO NOT SCALE DRAWING	REVISION
	NAME	SIGNATURE	DATE			TITLE: Apakšējais motora pārsegs	
DRAWN							
CHK'D							
APPV'D							
MFG							
Q.A				MATERIAL:		DWG NO.	A3
				WEIGHT:		SCALE:1:10	SHEET 1 OF 1

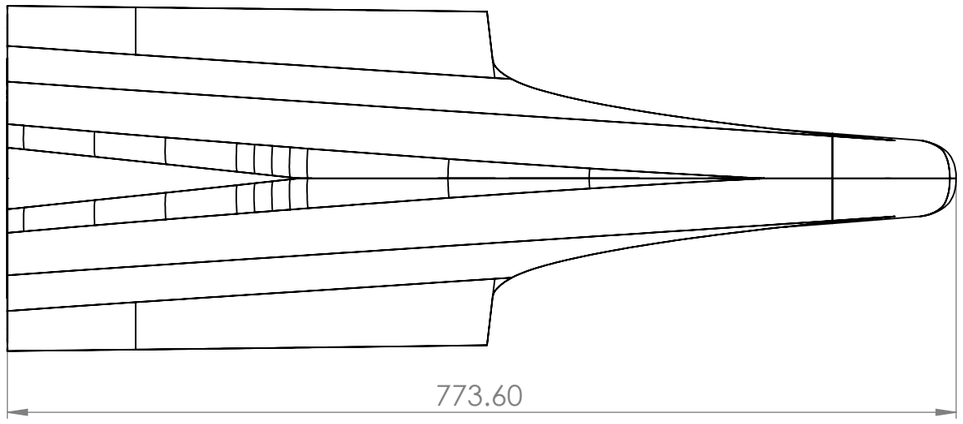

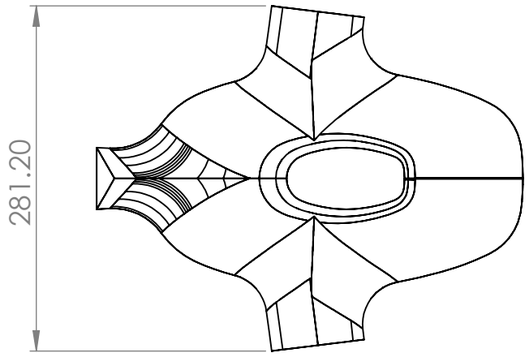

UNLESS OTHERWISE SPECIFIED: DIMENSIONS ARE IN MILLIMETERS SURFACE FINISH: TOLERANCES: LINEAR: ANGULAR:		FINISH:			DEBURR AND BREAK SHARP EDGES	DO NOT SCALE DRAWING	REVISION
	NAME	SIGNATURE	DATE			TITLE: Astes čaula	
DRAWN							
CHK'D							
APPV'D							
MFG							
Q.A				MATERIAL:		DWG NO.	A3
				WEIGHT:		SCALE:1:5	SHEET 1 OF 1

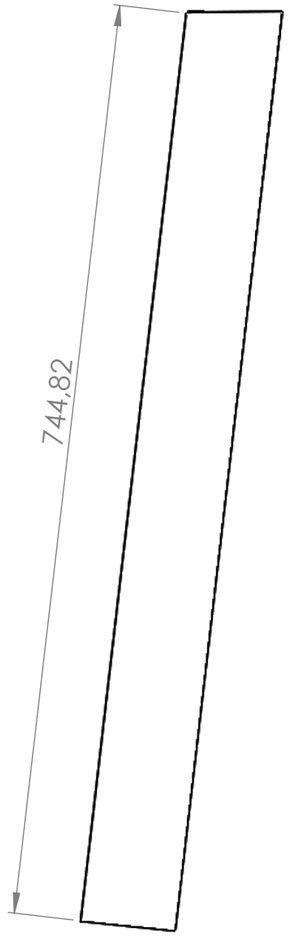

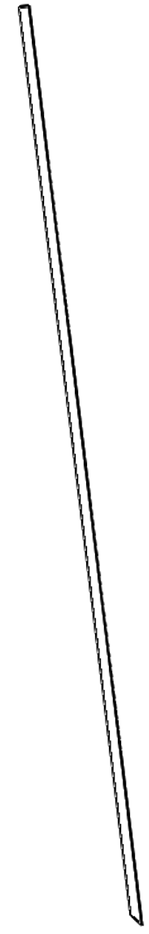

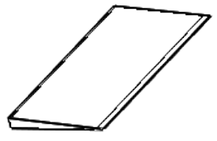

UNLESS OTHERWISE SPECIFIED: DIMENSIONS ARE IN MILLIMETERS SURFACE FINISH: TOLERANCES: LINEAR: ANGULAR:		FINISH:		DEBURR AND BREAK SHARP EDGES		DO NOT SCALE DRAWING	REVISION
	NAME	SIGNATURE	DATE			TITLE: Augšējā trimera čaula	
DRAWN							
CHK'D							
APPV'D							
MFG							
Q.A				MATERIAL:		DWG NO.	A3
				WEIGHT:		SCALE:1:10	SHEET 1 OF 1

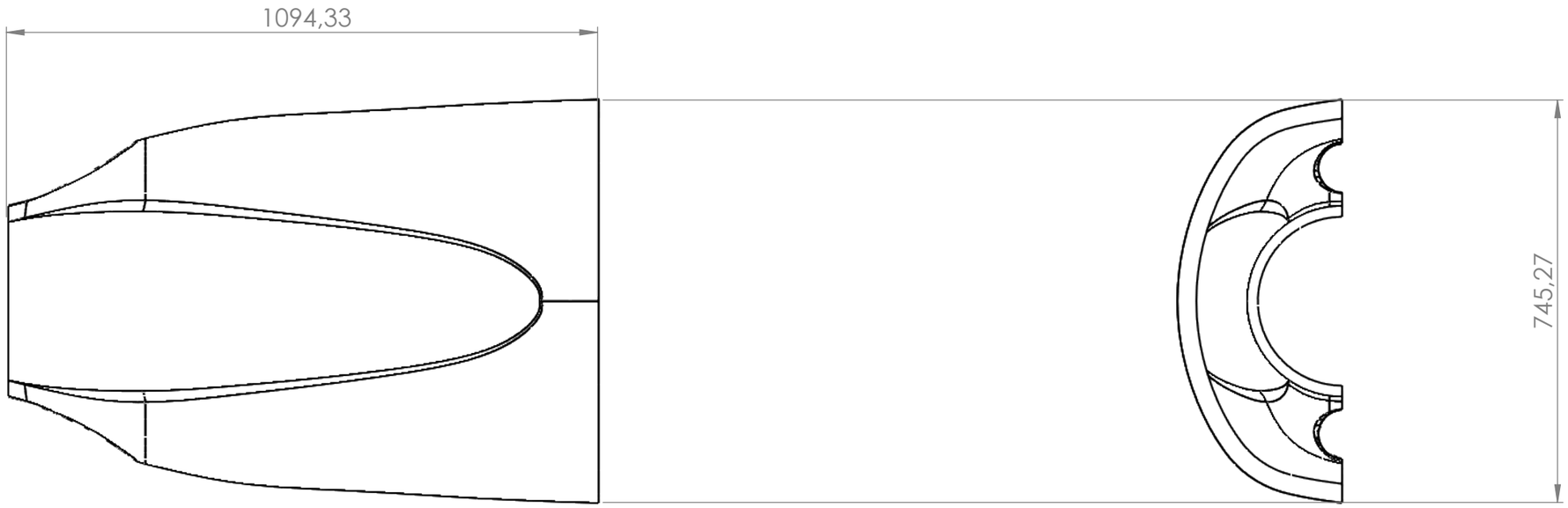

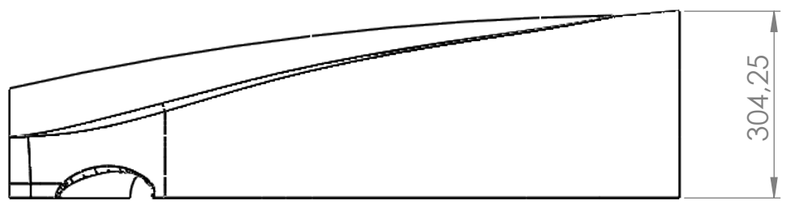

UNLESS OTHERWISE SPECIFIED: DIMENSIONS ARE IN MILLIMETERS SURFACE FINISH: TOLERANCES: LINEAR: ANGULAR:	FINISH:				DEBURR AND BREAK SHARP EDGES	DO NOT SCALE DRAWING	REVISION
	NAME	SIGNATURE	DATE			TITLE: Augšējais motora pārsegs	
DRAWN							
CHK'D							
APPV'D							
MFG							
Q.A				MATERIAL:		DWG NO.	A3
				WEIGHT:		SCALE:1:10	SHEET 1 OF 1

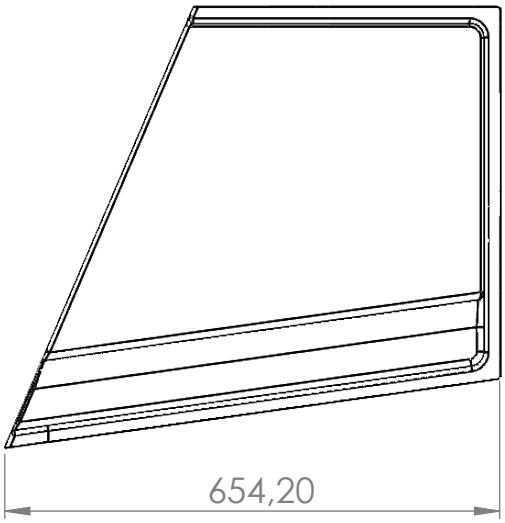

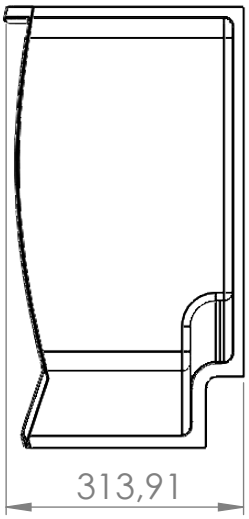

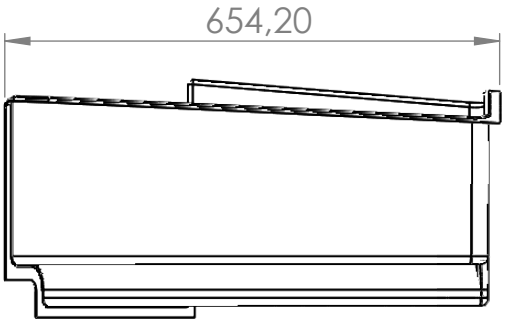

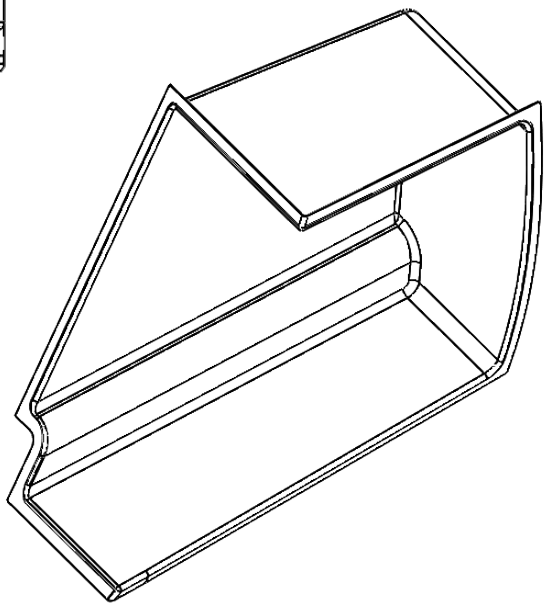

UNLESS OTHERWISE SPECIFIED: DIMENSIONS ARE IN MILLIMETERS SURFACE FINISH: TOLERANCES: LINEAR: ANGULAR:		FINISH:		DEBURR AND BREAK SHARP EDGES		DO NOT SCALE DRAWING	REVISION
	NAME	SIGNATURE	DATE			TITLE:	
DRAWN							
CHK'D							
APPV'D							
MFG							
Q.A				MATERIAL:		DWG NO.	A4
						Bagāžas nodalījums	
				WEIGHT:		SCALE:1:20	SHEET 1 OF 1

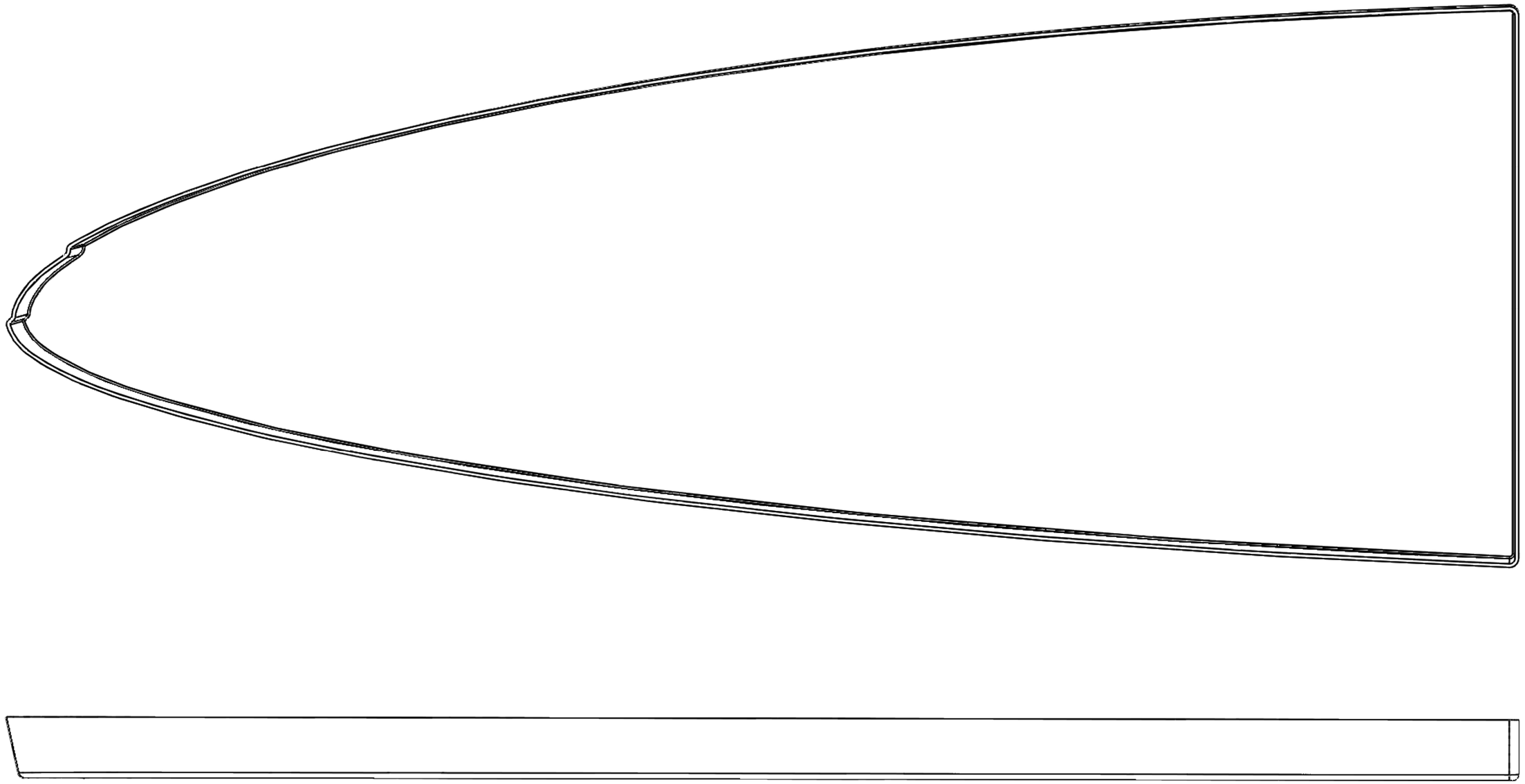

Labā spārna degvielas bākas iekšējā gala riba ir spoguļattēlā

UNLESS OTHERWISE SPECIFIED: DIMENSIONS ARE IN MILLIMETERS SURFACE FINISH: TOLERANCES: LINEAR: ANGULAR:	FINISH:		DEBURR AND BREAK SHARP EDGES	DO NOT SCALE DRAWING	REVISION
	NAME	SIGNATURE	DATE	TITLE: Kreisā spārna degvielas bākas iekšējā gala riba	
DRAWN					
CHK'D					
APPV'D					
MFG					
Q.A				DWG NO.	A2
				MATERIAL:	
				WEIGHT:	SCALE:1:5
					SHEET 1 OF 1

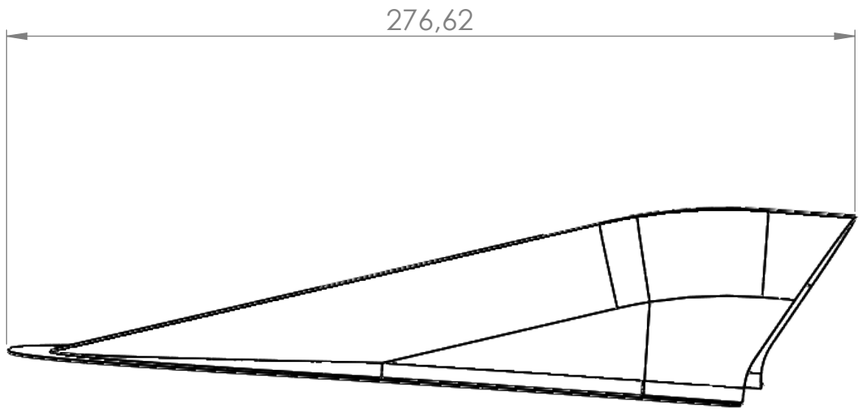

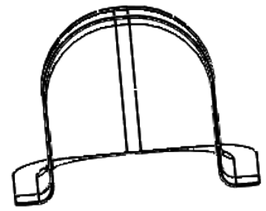

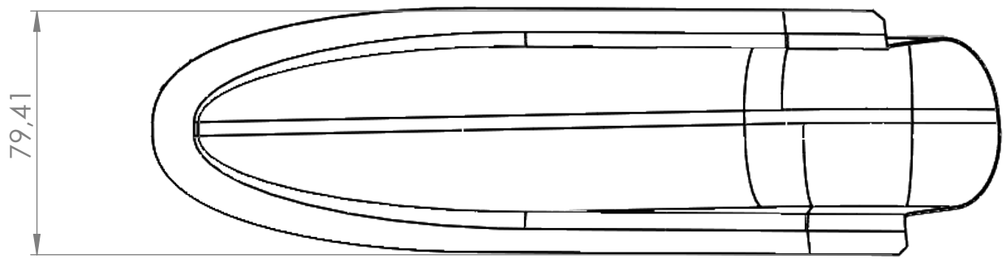

Kreisā spārna elerona vadības aptecētājs ir spoguļattēlā

UNLESS OTHERWISE SPECIFIED: DIMENSIONS ARE IN MILLIMETERS SURFACE FINISH: TOLERANCES: LINEAR: ANGULAR:		FINISH:			DEBURR AND BREAK SHARP EDGES	DO NOT SCALE DRAWING	REVISION
	NAME	SIGNATURE	DATE			TITLE: Labā spārna elerona vadības aptecētājs	
DRAWN							
CHK'D							
APPV'D							
MFG							
Q.A				MATERIAL:		DWG NO.	A3
				WEIGHT:		SCALE:1:2	SHEET 1 OF 1

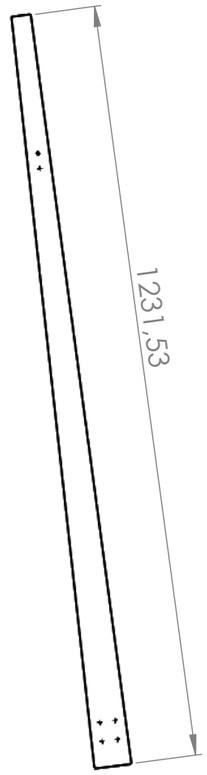

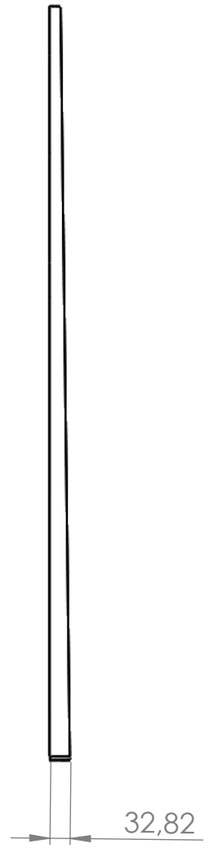

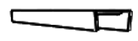

UNLESS OTHERWISE SPECIFIED: DIMENSIONS ARE IN MILLIMETERS SURFACE FINISH: TOLERANCES: LINEAR: ANGULAR:		FINISH:		DEBURR AND BREAK SHARP EDGES		DO NOT SCALE DRAWING	REVISION
	NAME	SIGNATURE	DATE			TITLE: Elevatora lonžerons	
DRAWN							
CHK'D							
APPV'D							
MFG							
Q.A				MATERIAL:		DWG NO.	A3
				WEIGHT:		SCALE:1:10	SHEET 1 OF 1

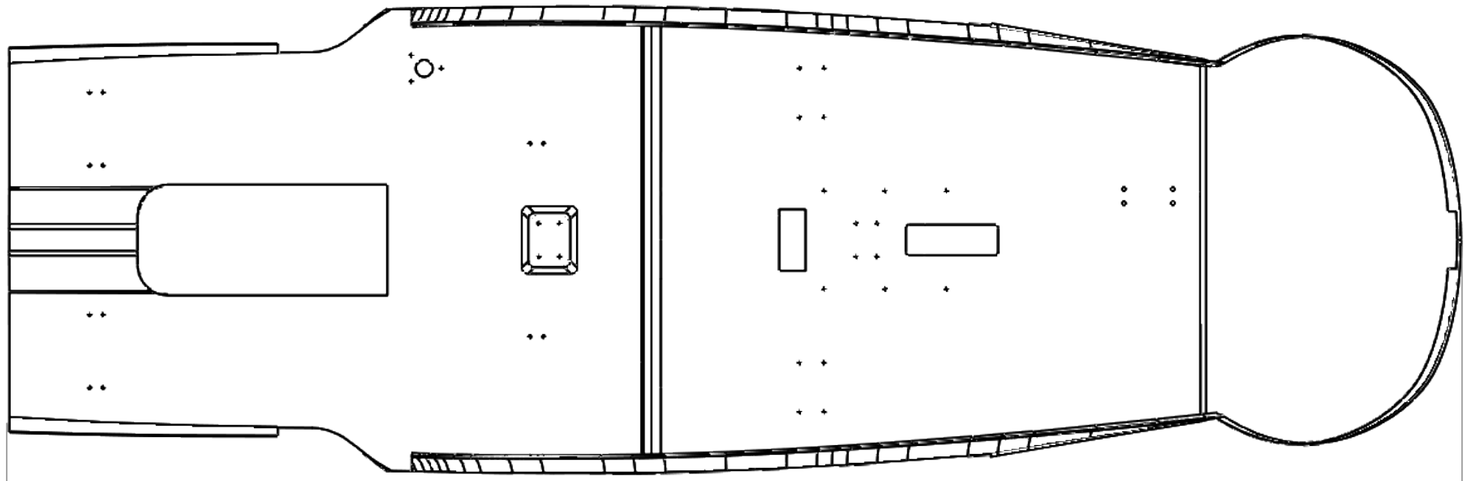

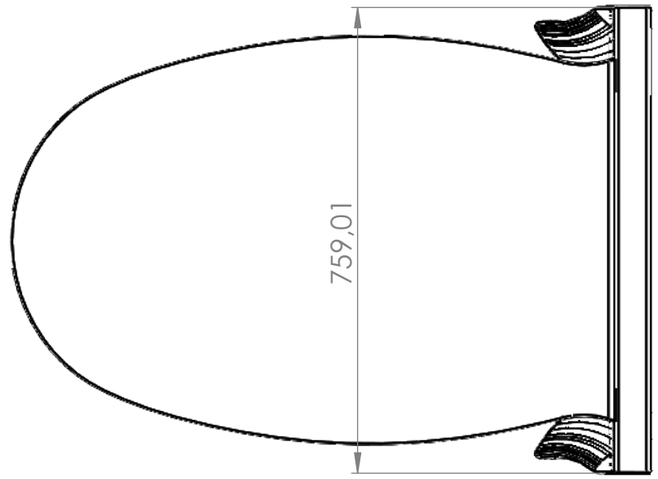

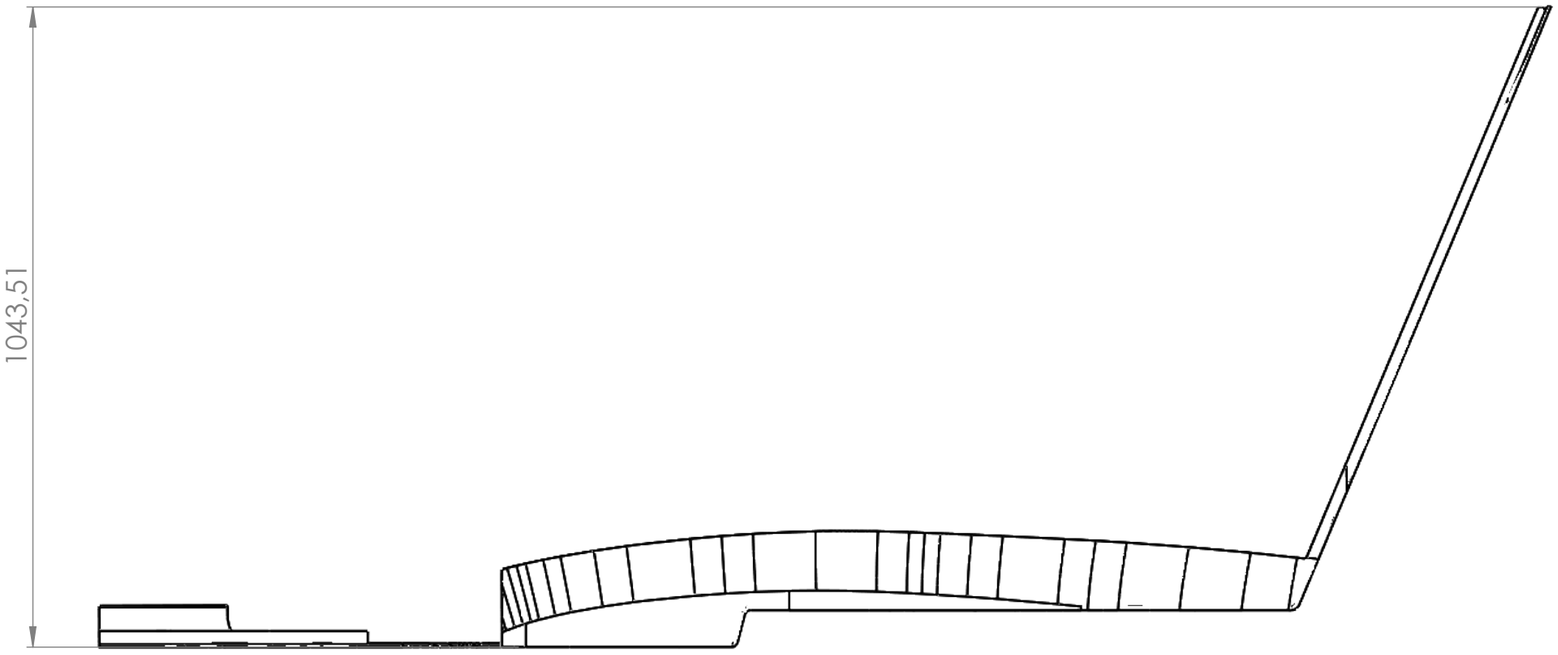

UNLESS OTHERWISE SPECIFIED: DIMENSIONS ARE IN MILLIMETERS SURFACE FINISH: TOLERANCES: LINEAR: ANGULAR:		FINISH:			DEBURR AND BREAK SHARP EDGES	DO NOT SCALE DRAWING	REVISION
	NAME	SIGNATURE	DATE			TITLE:	
DRAWN						Fizelāžas grīda	
CHK'D							
APPV'D							
MFG							
Q.A				MATERIAL:		DWG NO.	A3
				WEIGHT:		SCALE:1:20	SHEET 1 OF 1

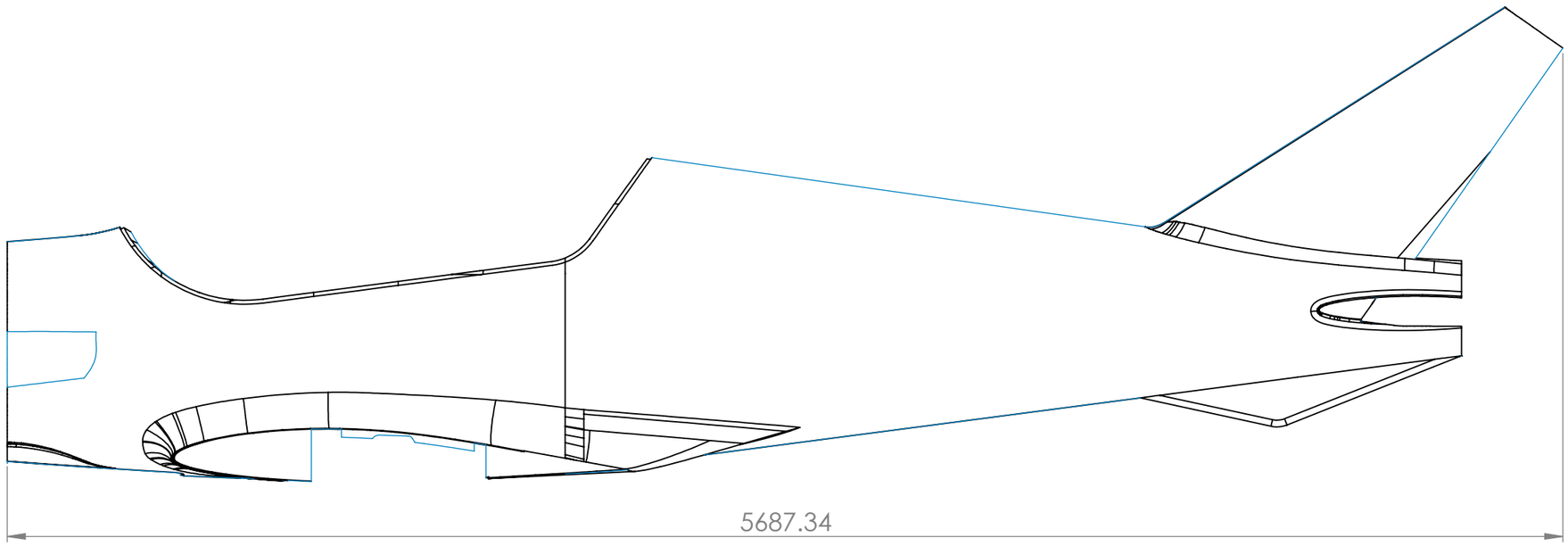

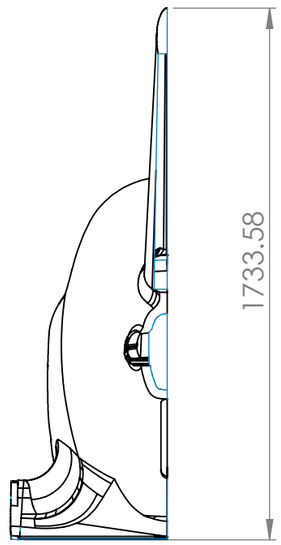

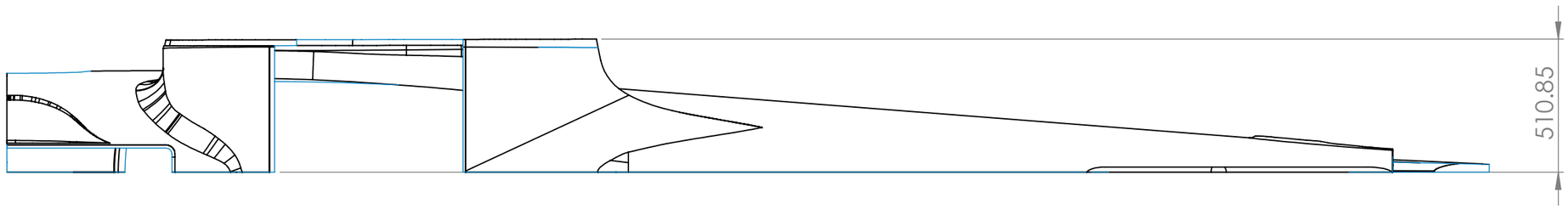

UNLESS OTHERWISE SPECIFIED: DIMENSIONS ARE IN MILLIMETERS SURFACE FINISH: TOLERANCES: LINEAR: ANGULAR:		FINISH:			DEBURR AND BREAK SHARP EDGES	DO NOT SCALE DRAWING	REVISION
	NAME	SIGNATURE	DATE			TITLE: Fizelāžas kreisā čaula	
DRAWN							
CHK'D							
APPV'D							
MFG							
Q.A				MATERIAL:		DWG NO.	A3
				WEIGHT:		SCALE:1:50	SHEET 1 OF 1

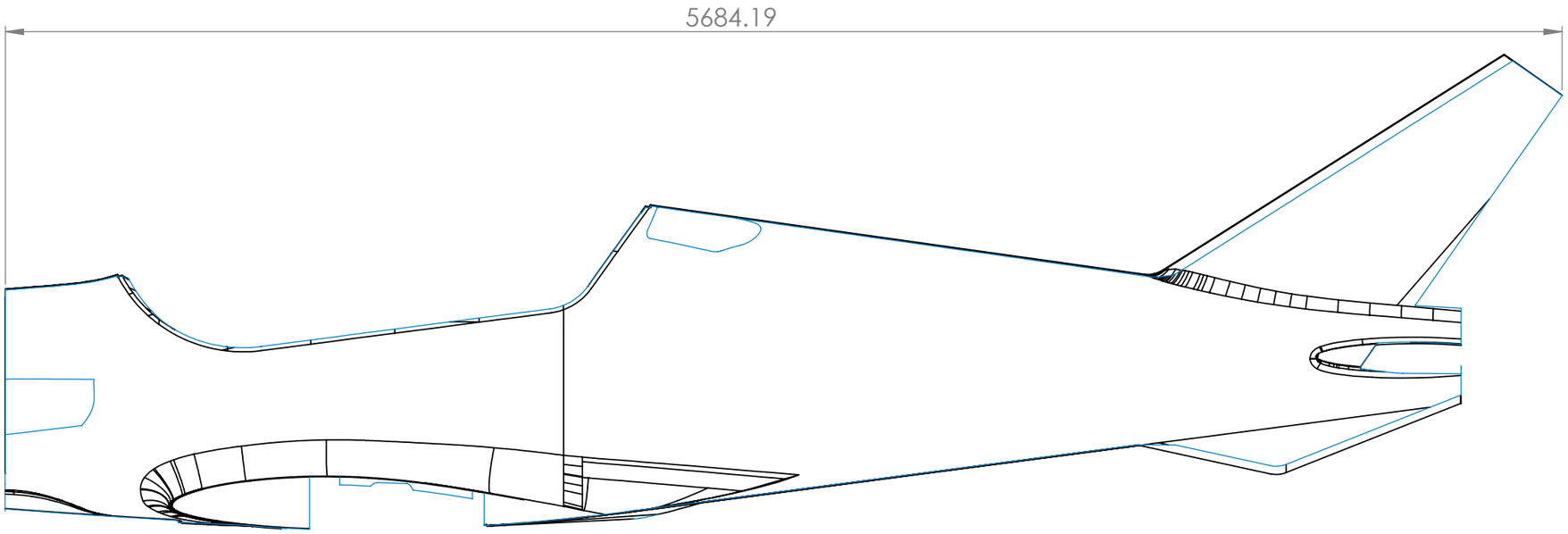

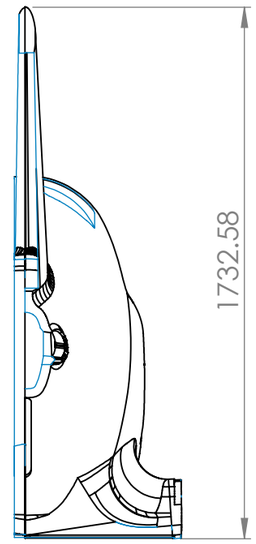

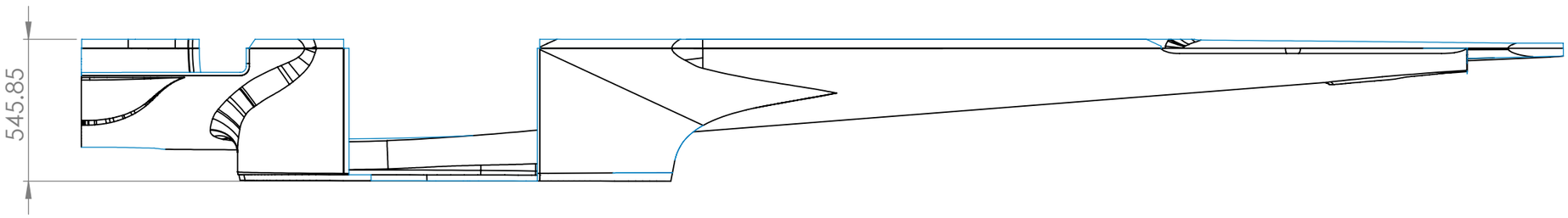

UNLESS OTHERWISE SPECIFIED: DIMENSIONS ARE IN MILLIMETERS SURFACE FINISH: TOLERANCES: LINEAR: ANGULAR:		FINISH:		DEBURR AND BREAK SHARP EDGES		DO NOT SCALE DRAWING	REVISION
	NAME	SIGNATURE	DATE			TITLE: Fizelāžas labā čaula	
DRAWN							
CHK'D							
APPV'D							
MFG							
Q.A				MATERIAL:		DWG NO.	A3
				WEIGHT:		SCALE:1:50	SHEET 1 OF 1

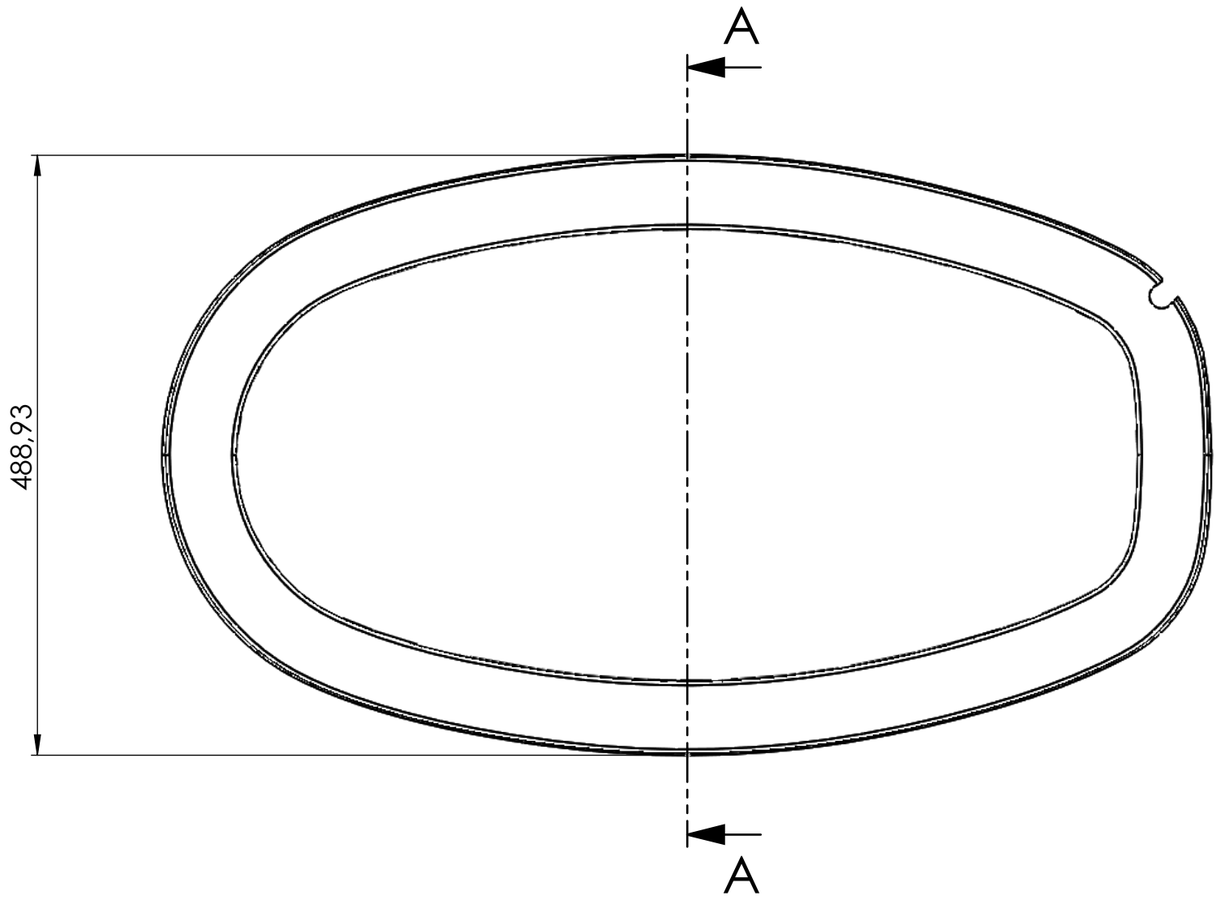



SECTION A-A

SCALE 1 : 5

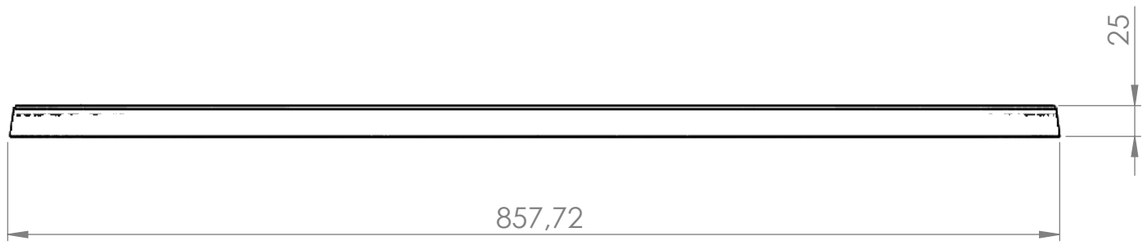

UNLESS OTHERWISE SPECIFIED: DIMENSIONS ARE IN MILLIMETERS SURFACE FINISH: TOLERANCES: LINEAR: ANGULAR:	FINISH:				DEBURR AND BREAK SHARP EDGES	DO NOT SCALE DRAWING	REVISION
	NAME	SIGNATURE	DATE			TITLE: Fizelāžas riba	
DRAWN							
CHK'D							
APPV'D							
MFG							
Q.A				MATERIAL:		DWG NO.	A3
				WEIGHT:		SCALE:1:10	SHEET 1 OF 1

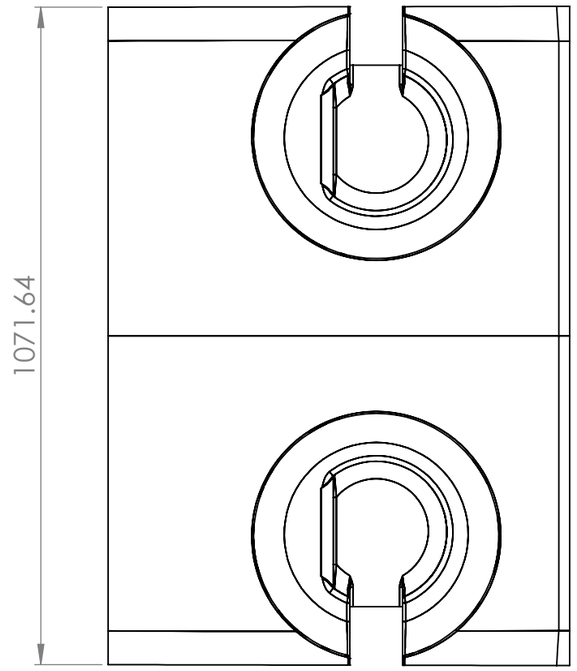

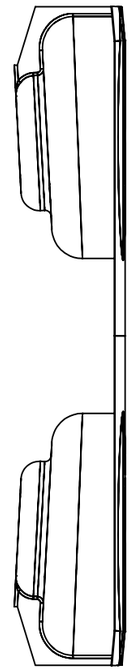

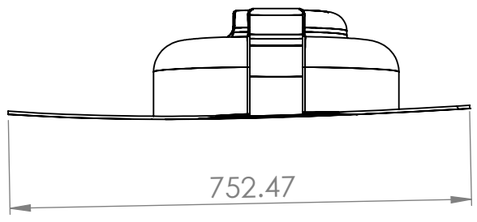

UNLESS OTHERWISE SPECIFIED: DIMENSIONS ARE IN MILLIMETERS SURFACE FINISH: TOLERANCES: LINEAR: ANGULAR:		FINISH:			DEBURR AND BREAK SHARP EDGES	DO NOT SCALE DRAWING	REVISION
	NAME	SIGNATURE	DATE			TITLE: Galvenās šasijas nodalījums	
DRAWN							
CHK'D							
APPV'D							
MFG							
Q.A				MATERIAL:		DWG NO.	A3
				WEIGHT:		SCALE:1:10	SHEET 1 OF 1

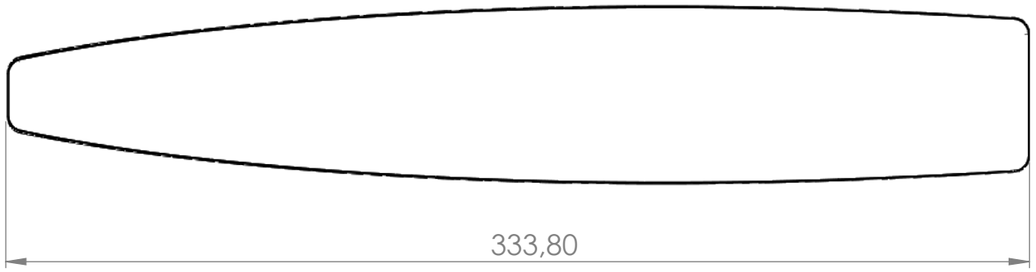

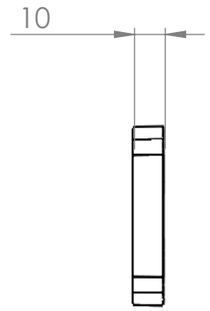

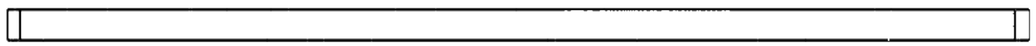

UNLESS OTHERWISE SPECIFIED: DIMENSIONS ARE IN MILLIMETERS SURFACE FINISH: TOLERANCES: LINEAR: ANGULAR:		FINISH:			DEBURR AND BREAK SHARP EDGES	DO NOT SCALE DRAWING	REVISION
	NAME	SIGNATURE	DATE			TITLE: Horizontālā stabilizators riba	
DRAWN							
CHK'D							
APPV'D							
MFG							
Q.A				MATERIAL:		DWG NO.	A3
				WEIGHT:		SCALE:1:2	SHEET 1 OF 1

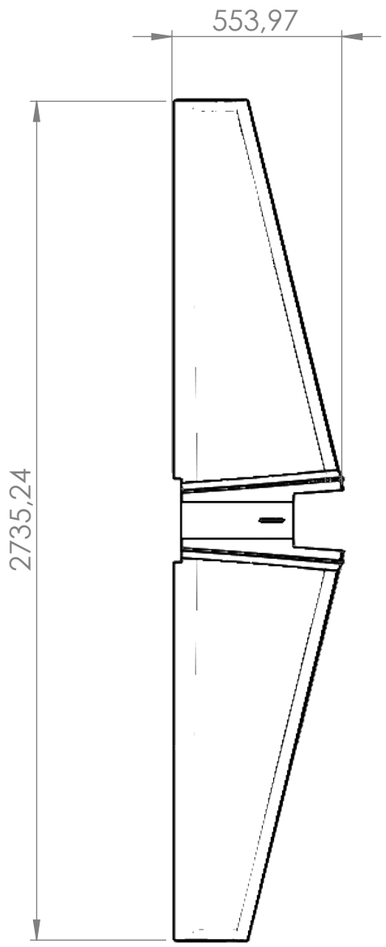





UNLESS OTHERWISE SPECIFIED: DIMENSIONS ARE IN MILLIMETERS SURFACE FINISH: TOLERANCES: LINEAR: ANGULAR:		FINISH:			DEBURR AND BREAK SHARP EDGES	DO NOT SCALE DRAWING	REVISION
	NAME	SIGNATURE	DATE			TITLE: Horizontālā stabilizatora apakšējā čaula	
DRAWN							
CHK'D							
APPV'D							
MFG							
Q.A				MATERIAL:		DWG NO.	A3
				WEIGHT:		SCALE:1:20	SHEET 1 OF 1

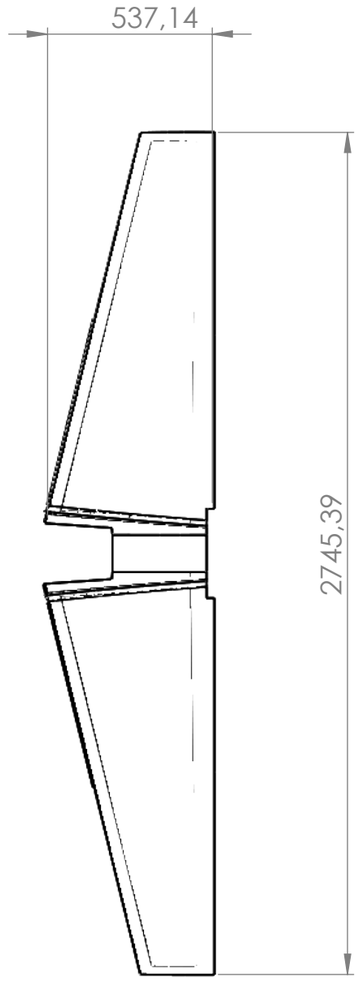





UNLESS OTHERWISE SPECIFIED: DIMENSIONS ARE IN MILLIMETERS SURFACE FINISH: TOLERANCES: LINEAR: ANGULAR:		FINISH:			DEBURR AND BREAK SHARP EDGES	DO NOT SCALE DRAWING	REVISION
	NAME	SIGNATURE	DATE			TITLE: Horizontālā stabilizatora augšējā čaula	
DRAWN							
CHK'D							
APPV'D							
MFG							
Q.A				MATERIAL:		DWG NO.	A3
				WEIGHT:		SCALE:1:20	SHEET 1 OF 1

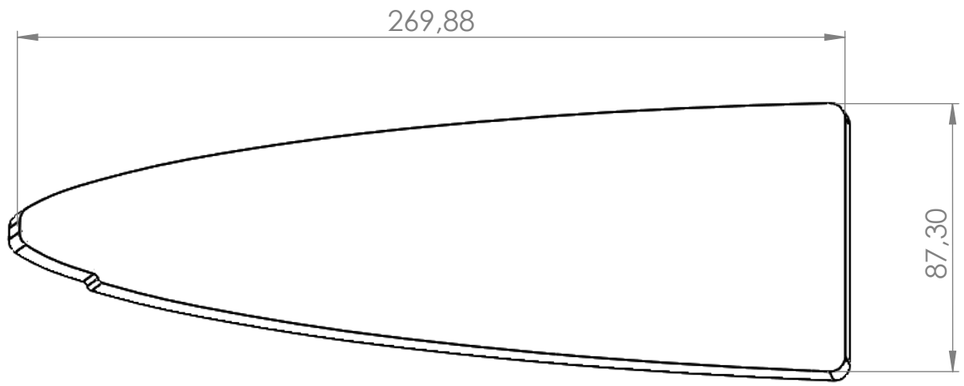

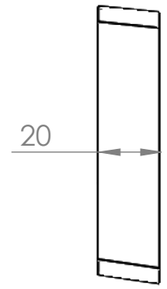

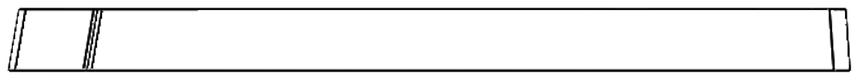

Horizontālā stabilizatora kreisā gala riba ir spoguļattēlā

UNLESS OTHERWISE SPECIFIED: DIMENSIONS ARE IN MILLIMETERS SURFACE FINISH: TOLERANCES: LINEAR: ANGULAR:	FINISH:				DEBURR AND BREAK SHARP EDGES	DO NOT SCALE DRAWING	REVISION
	NAME	SIGNATURE	DATE			TITLE: Horizontālā stabilizatora labā gala riba	
DRAWN							
CHK'D							
APPV'D							
MFG							
Q.A				MATERIAL:		DWG NO.	A3
				WEIGHT:		SCALE:1:2	SHEET 1 OF 1

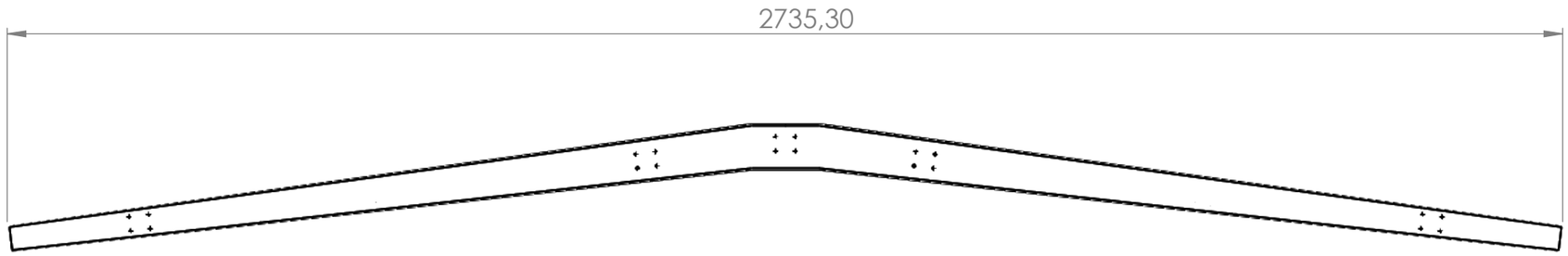



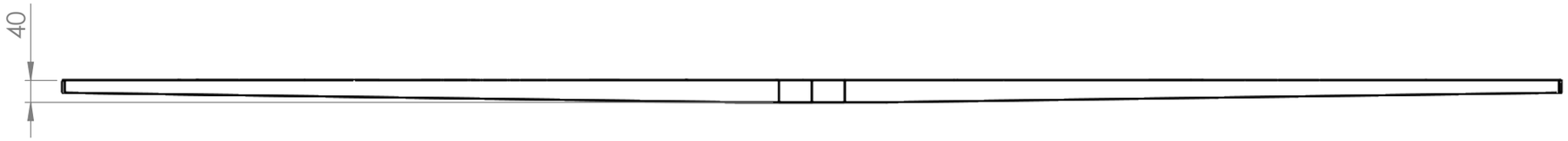

UNLESS OTHERWISE SPECIFIED: DIMENSIONS ARE IN MILLIMETERS SURFACE FINISH: TOLERANCES: LINEAR: ANGULAR:		FINISH:			DEBURR AND BREAK SHARP EDGES	DO NOT SCALE DRAWING	REVISION
	NAME	SIGNATURE	DATE			TITLE: Horizontālā stabilizatora galvenais lonžerons	
DRAWN							
CHK'D							
APPV'D							
MFG							
Q.A				MATERIAL:		DWG NO.	A3
				WEIGHT:		SCALE:1:20	SHEET 1 OF 1

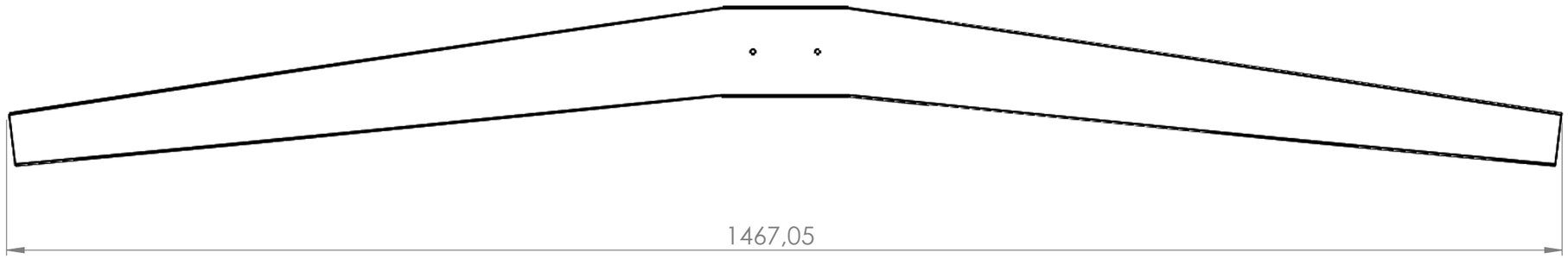



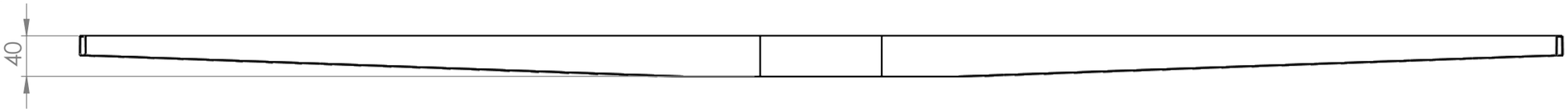

UNLESS OTHERWISE SPECIFIED: DIMENSIONS ARE IN MILLIMETERS SURFACE FINISH: TOLERANCES: LINEAR: ANGULAR:	FINISH:				DEBURR AND BREAK SHARP EDGES	DO NOT SCALE DRAWING	REVISION
	NAME	SIGNATURE	DATE			TITLE: Horizontālā stabilizatora priekšējais lonžerons	
DRAWN							
CHK'D							
APPV'D							
MFG							
Q.A				MATERIAL:		DWG NO.	A3
				WEIGHT:		SCALE:1:10	SHEET 1 OF 1

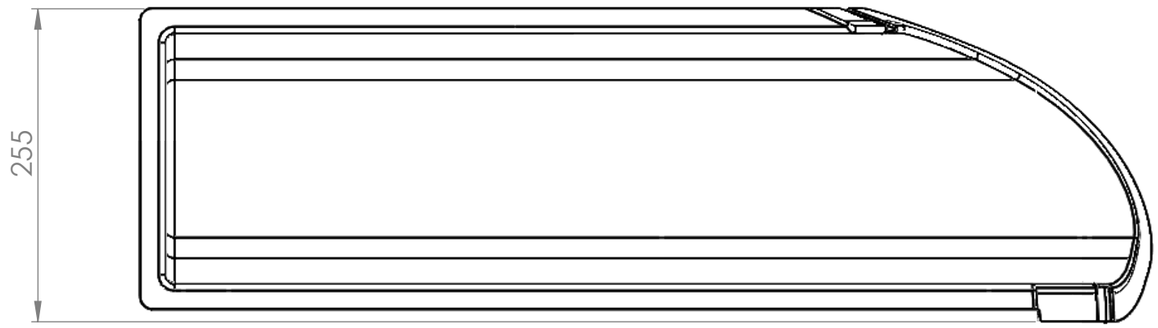

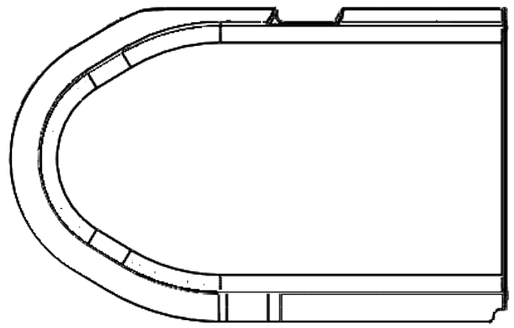

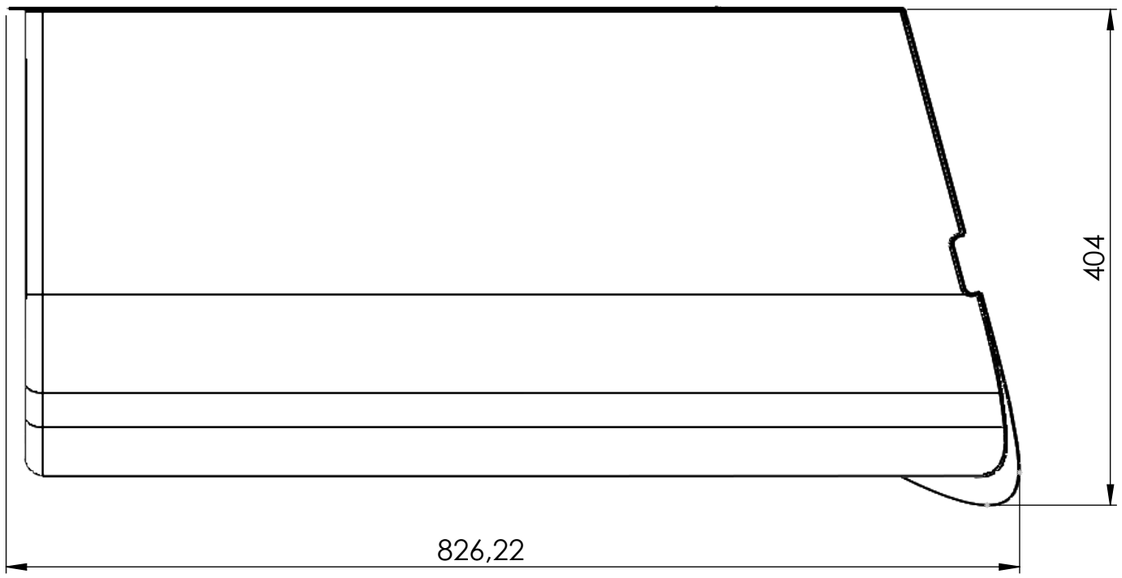

UNLESS OTHERWISE SPECIFIED: DIMENSIONS ARE IN MILLIMETERS SURFACE FINISH: TOLERANCES: LINEAR: ANGULAR:		FINISH:			DEBURR AND BREAK SHARP EDGES	DO NOT SCALE DRAWING	REVISION
	NAME	SIGNATURE	DATE			TITLE: Izpletņa nodalījums	
DRAWN							
CHK'D							
APPV'D							
MFG							
Q.A				MATERIAL:		DWG NO.	A3
				WEIGHT:		SCALE:1:10	SHEET 1 OF 1

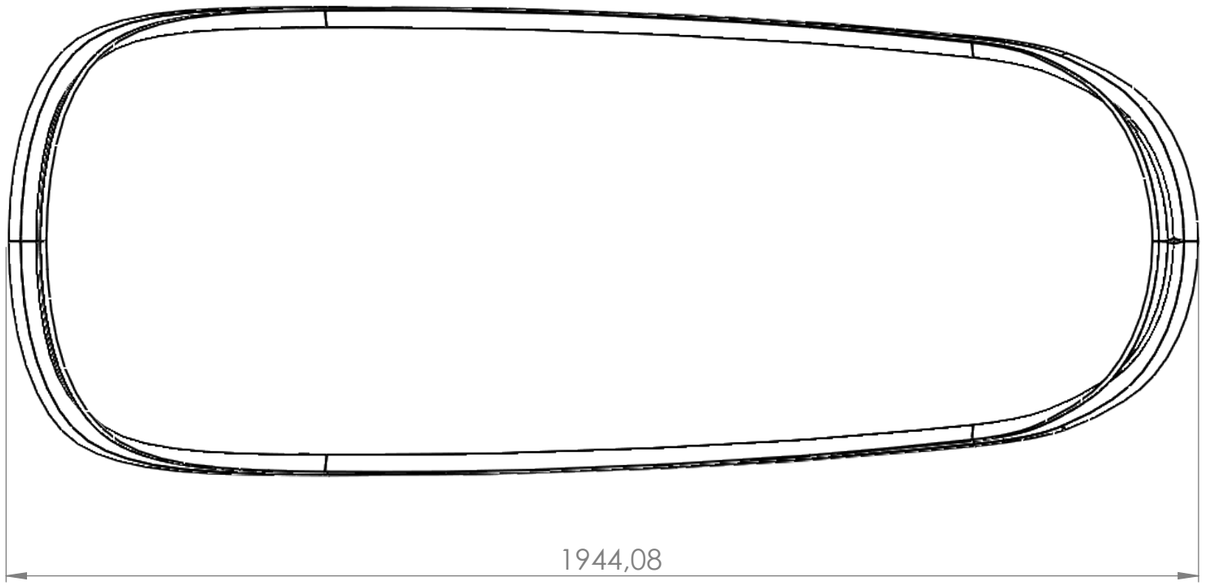

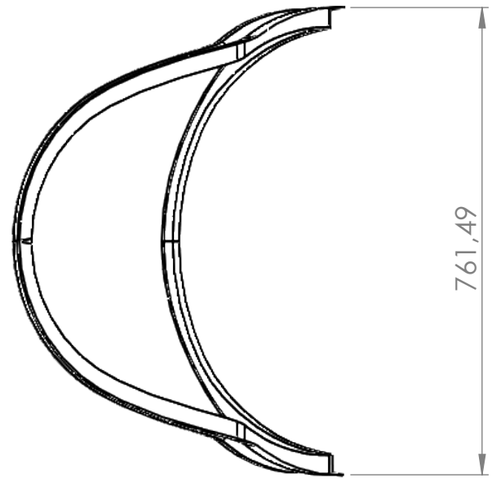

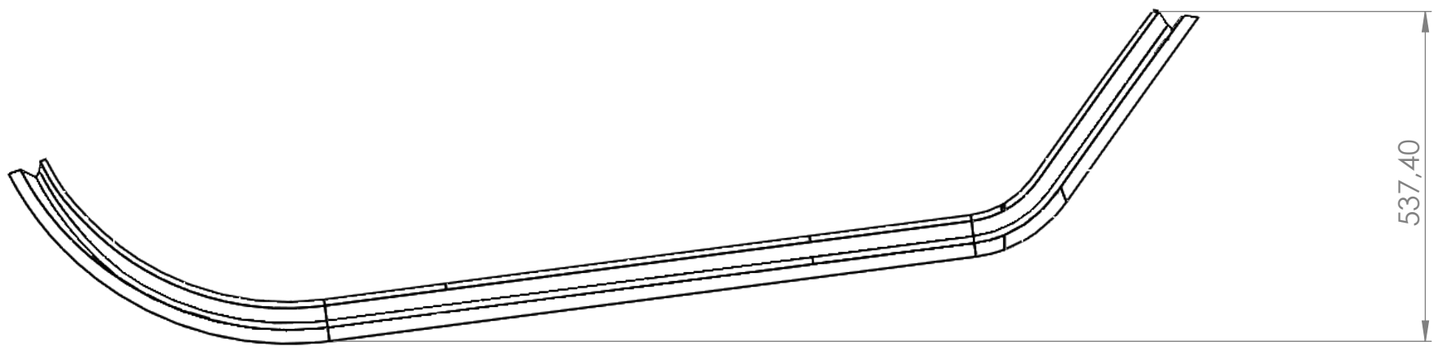

UNLESS OTHERWISE SPECIFIED: DIMENSIONS ARE IN MILLIMETERS SURFACE FINISH: TOLERANCES: LINEAR: ANGULAR:	FINISH:				DEBURR AND BREAK SHARP EDGES	DO NOT SCALE DRAWING	REVISION
	NAME	SIGNATURE	DATE			TITLE: Kabīnes rāmis	
DRAWN							
CHK'D							
APPV'D							
MFG							
Q.A				MATERIAL:		DWG NO.	A3
				WEIGHT:		SCALE:1:20	SHEET 1 OF 1

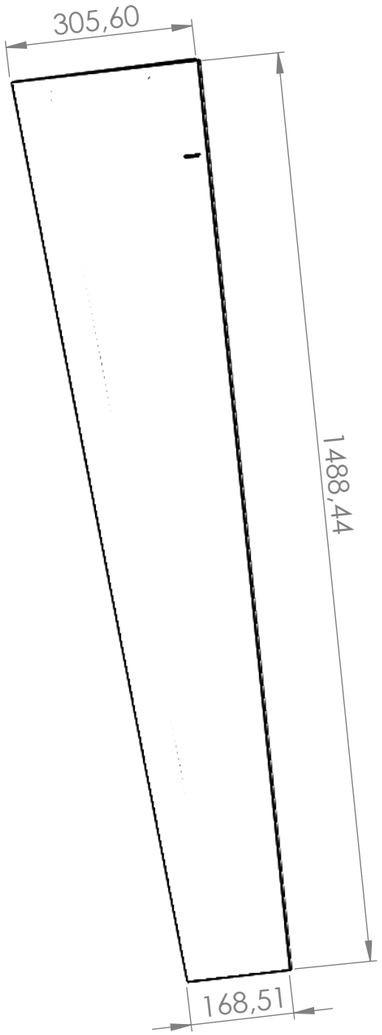



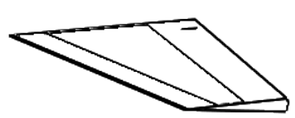

UNLESS OTHERWISE SPECIFIED: DIMENSIONS ARE IN MILLIMETERS SURFACE FINISH: TOLERANCES: LINEAR: ANGULAR:		FINISH:			DEBURR AND BREAK SHARP EDGES	DO NOT SCALE DRAWING	REVISION
	NAME	SIGNATURE	DATE			TITLE: Kreisā elerona apakšējā čaula	
DRAWN							
CHK'D							
APPV'D							
MFG							
Q.A				MATERIAL:		DWG NO.	A3
				WEIGHT:		SCALE:1:20	SHEET 1 OF 1

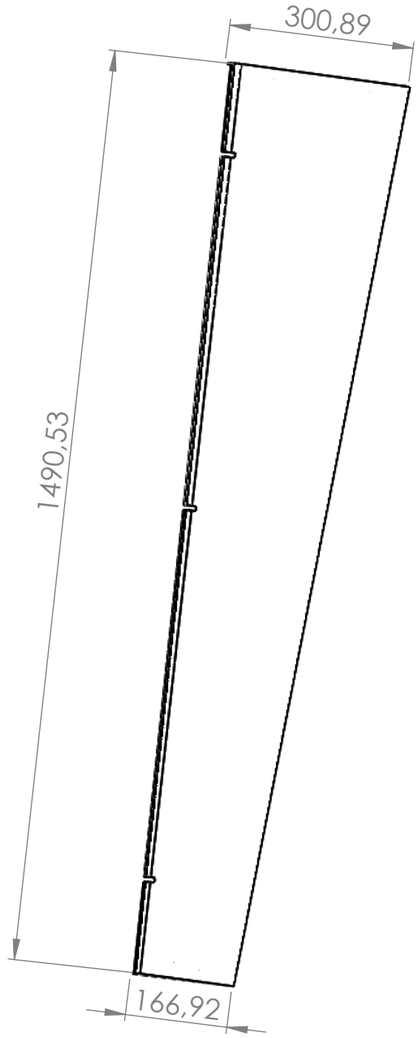



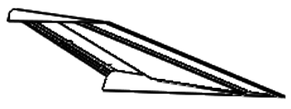

UNLESS OTHERWISE SPECIFIED: DIMENSIONS ARE IN MILLIMETERS SURFACE FINISH: TOLERANCES: LINEAR: ANGULAR:		FINISH:				DEBURR AND BREAK SHARP EDGES	DO NOT SCALE DRAWING / REVISION
	NAME	SIGNATURE	DATE				TITLE: Kreisā elerona augšējā čaula
DRAWN							
CHK'D							
APPV'D							
MFG							
Q.A				MATERIAL:			DWG NO. A3
				WEIGHT:			SCALE:1:20 / SHEET 1 OF 1

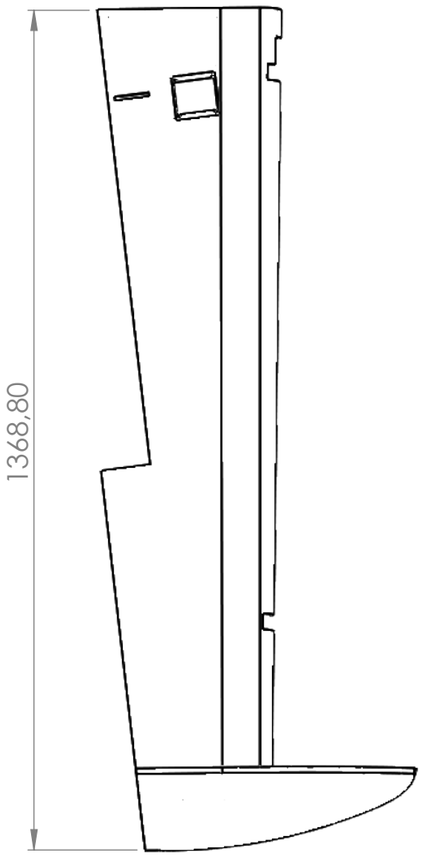

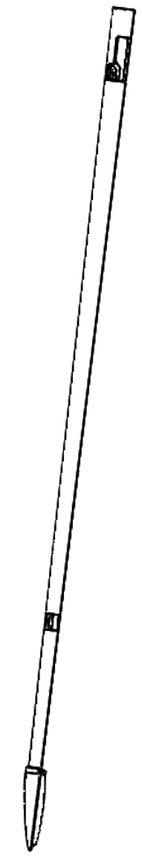

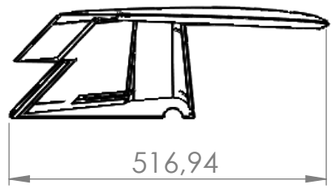

UNLESS OTHERWISE SPECIFIED: DIMENSIONS ARE IN MILLIMETERS SURFACE FINISH: TOLERANCES: LINEAR: ANGULAR:	FINISH:			DEBURR AND BREAK SHARP EDGES	DO NOT SCALE DRAWING	REVISION	
	NAME	SIGNATURE	DATE		TITLE: Kreisā elevatora apakšējā čaula		
DRAWN							
CHK'D							
APPV'D							
MFG							
Q.A				MATERIAL:	DWG NO.	A3	
				WEIGHT:	SCALE:1:10	SHEET 1 OF 1	

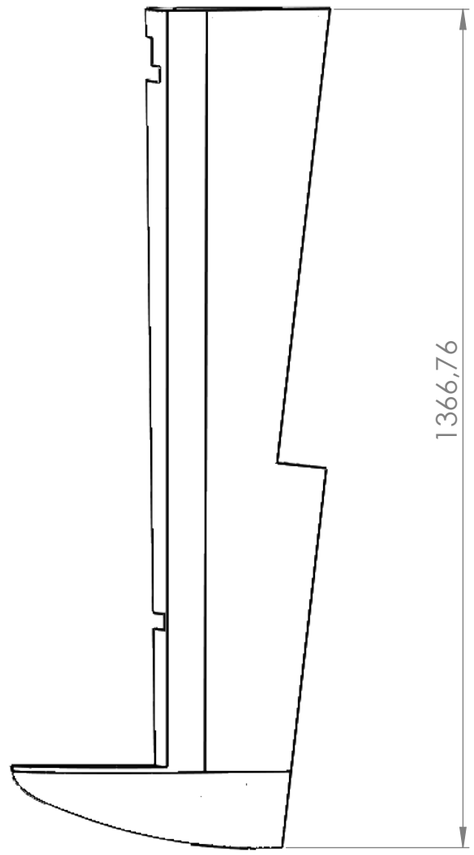

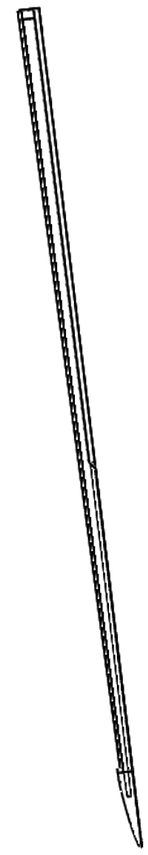

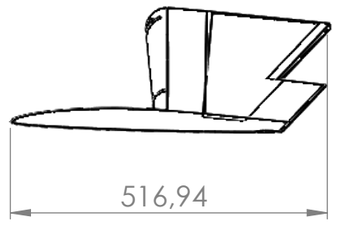

UNLESS OTHERWISE SPECIFIED: DIMENSIONS ARE IN MILLIMETERS SURFACE FINISH: TOLERANCES: LINEAR: ANGULAR:		FINISH:			DEBURR AND BREAK SHARP EDGES	DO NOT SCALE DRAWING	REVISION
	NAME	SIGNATURE	DATE			TITLE: Kreisā elevatora augšējā čaula	
DRAWN							
CHK'D							
APPV'D							
MFG							
Q.A				MATERIAL:		DWG NO.	A3
				WEIGHT:		SCALE:1:10	SHEET 1 OF 1

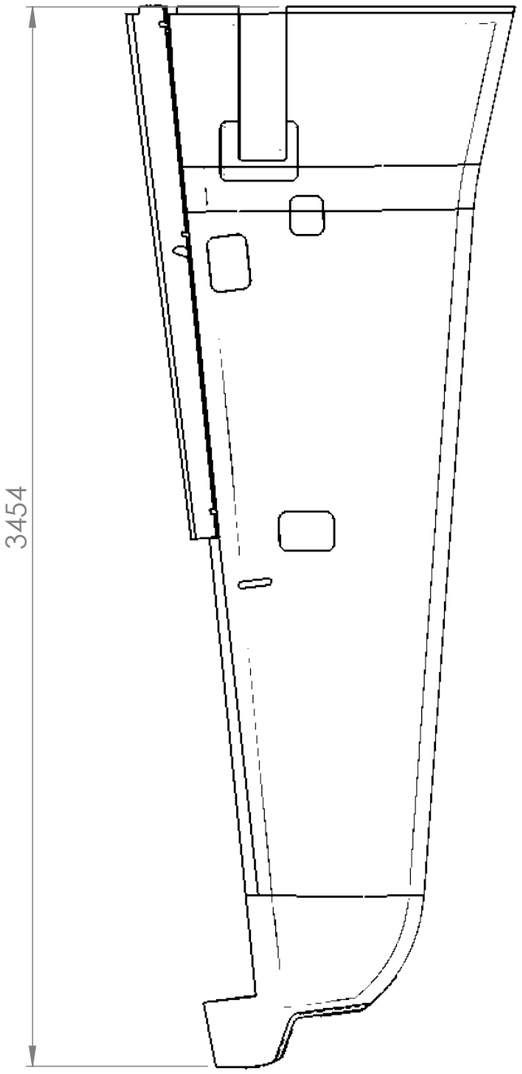

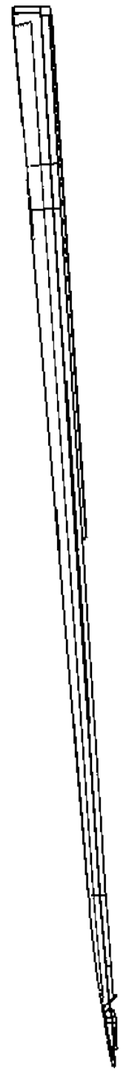

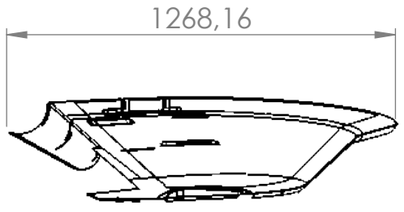

UNLESS OTHERWISE SPECIFIED: DIMENSIONS ARE IN MILLIMETERS SURFACE FINISH: TOLERANCES: LINEAR: ANGULAR:		FINISH:		DEBURR AND BREAK SHARP EDGES		DO NOT SCALE DRAWING	REVISION
	NAME	SIGNATURE	DATE			TITLE: Kreisā spārna apakšējā čaula	
DRAWN							
CHK'D							
APPV'D							
MFG							
Q.A				MATERIAL:		DWG NO.	A3
				WEIGHT:		SCALE:1:50	SHEET 1 OF 1

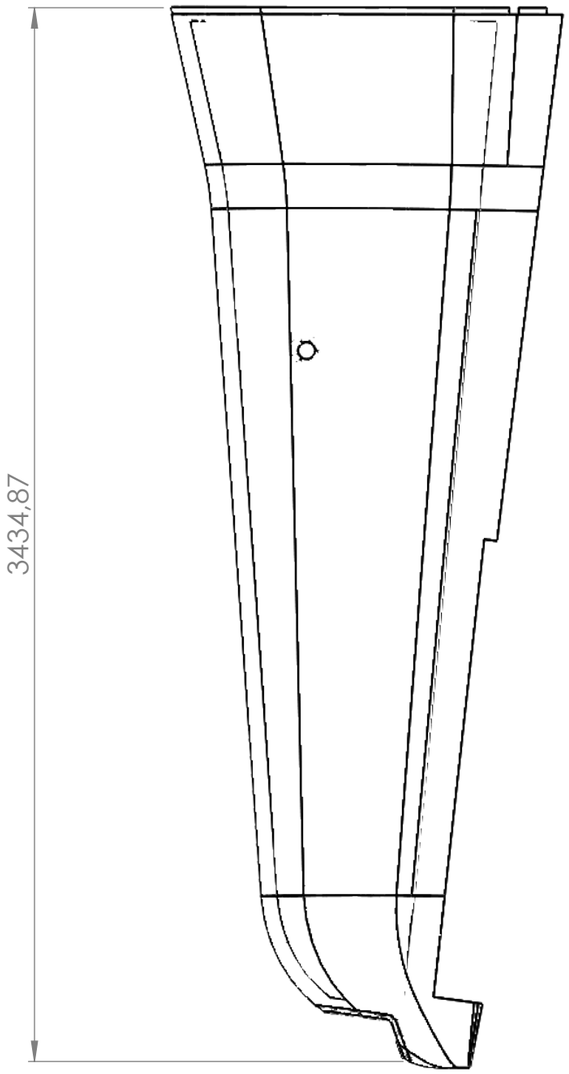



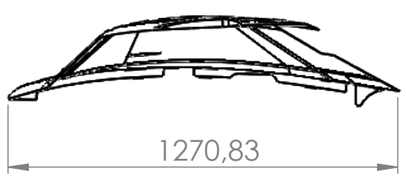

UNLESS OTHERWISE SPECIFIED: DIMENSIONS ARE IN MILLIMETERS SURFACE FINISH: TOLERANCES: LINEAR: ANGULAR:		FINISH:			DEBURR AND BREAK SHARP EDGES	DO NOT SCALE DRAWING	REVISION
	NAME	SIGNATURE	DATE			TITLE: Kreisā spārna augšējā čaula	
DRAWN							
CHK'D							
APPV'D							
MFG							
Q.A				MATERIAL:		DWG NO.	A3
				WEIGHT:		SCALE:1:50	SHEET 1 OF 1

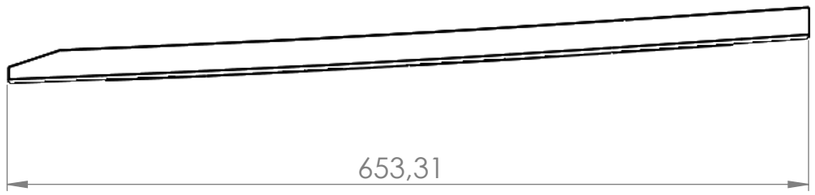





Labais kronšteins ir spoguļattēlā

UNLESS OTHERWISE SPECIFIED: DIMENSIONS ARE IN MILLIMETERS SURFACE FINISH: TOLERANCES: LINEAR: ANGULAR:		FINISH:			DEBURR AND BREAK SHARP EDGES	DO NOT SCALE DRAWING	REVISION
	NAME	SIGNATURE	DATE			TITLE:	
DRAWN						Kreisais kronšteins	
CHK'D							
APPV'D							
MFG							
Q.A				MATERIAL:		DWG NO.	A3
				WEIGHT:		SCALE:1:5	SHEET 1 OF 1

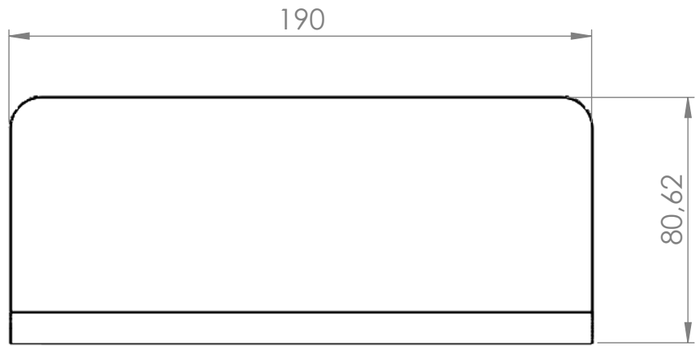



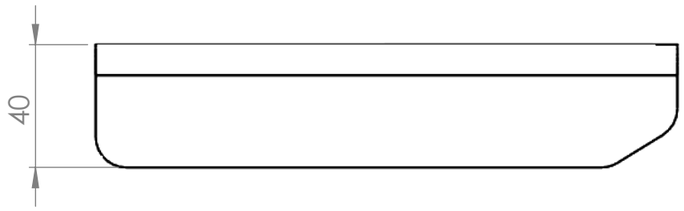

UNLESS OTHERWISE SPECIFIED: DIMENSIONS ARE IN MILLIMETERS SURFACE FINISH: TOLERANCES: LINEAR: ANGULAR:	FINISH:				DEBURR AND BREAK SHARP EDGES	DO NOT SCALE DRAWING	REVISION
	NAME	SIGNATURE	DATE			TITLE: L profils 80x40x210	
DRAWN							
CHK'D							
APPV'D							
MFG							
Q.A				MATERIAL:		DWG NO.	A3
				WEIGHT:		SCALE:1:2	SHEET 1 OF 1





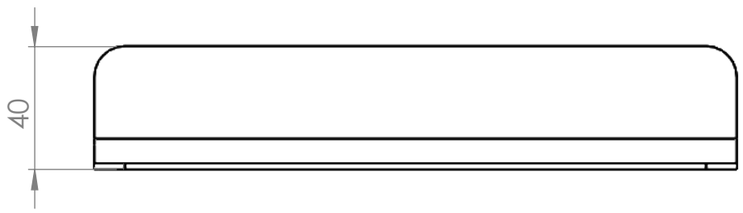

UNLESS OTHERWISE SPECIFIED: DIMENSIONS ARE IN MILLIMETERS SURFACE FINISH: TOLERANCES: LINEAR: ANGULAR:		FINISH:			DEBURR AND BREAK SHARP EDGES	DO NOT SCALE DRAWING	REVISION
	NAME	SIGNATURE	DATE			TITLE: L profils 75x40x210	
DRAWN							
CHK'D							
APPV'D							
MFG							
Q.A				MATERIAL:		DWG NO.	A3
				WEIGHT:		SCALE:1:2	SHEET 1 OF 1

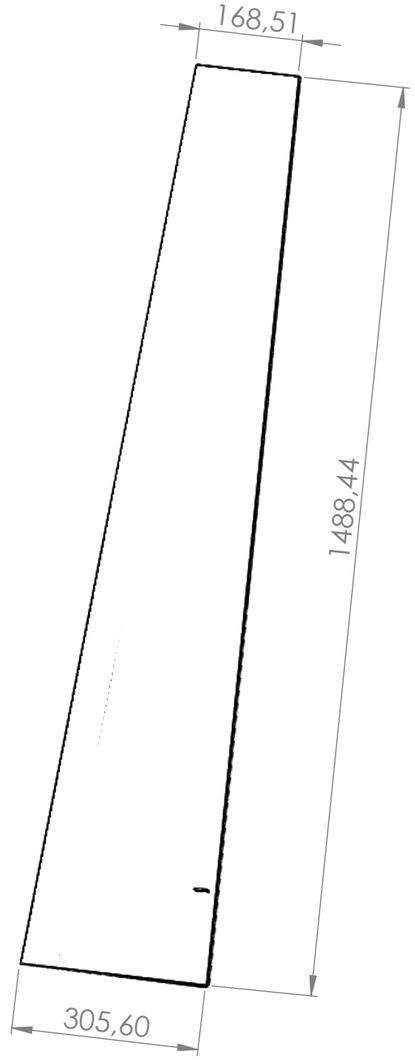



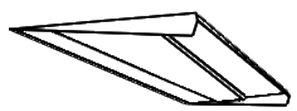

UNLESS OTHERWISE SPECIFIED: DIMENSIONS ARE IN MILLIMETERS SURFACE FINISH: TOLERANCES: LINEAR: ANGULAR:		FINISH:		DEBURR AND BREAK SHARP EDGES		DO NOT SCALE DRAWING	REVISION
	NAME	SIGNATURE	DATE			TITLE: Labā elerona apakšēja čaula	
DRAWN							
CHK'D							
APPV'D							
MFG							
Q.A				MATERIAL:		DWG NO.	A3
				WEIGHT:		SCALE:1:20	SHEET 1 OF 1

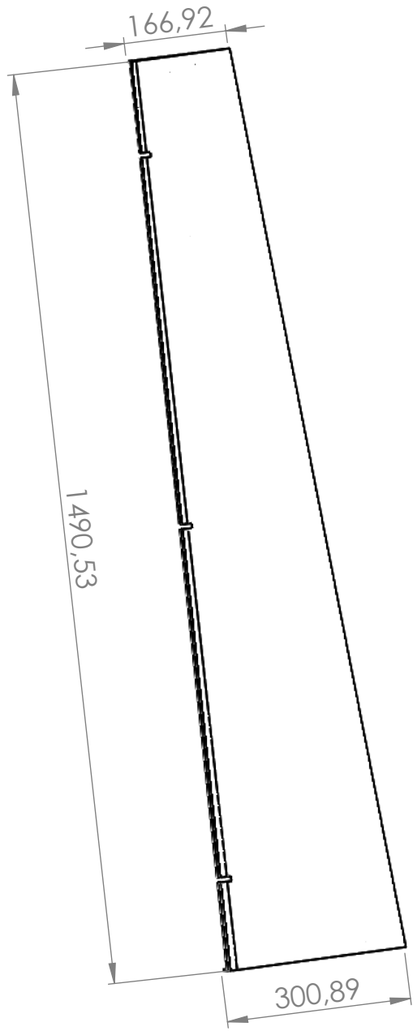



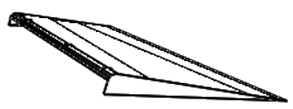

UNLESS OTHERWISE SPECIFIED: DIMENSIONS ARE IN MILLIMETERS SURFACE FINISH: TOLERANCES: LINEAR: ANGULAR:		FINISH:				DEBURR AND BREAK SHARP EDGES	DO NOT SCALE DRAWING / REVISION
	NAME	SIGNATURE	DATE				TITLE: Labā elerona augšējā čaula
DRAWN							
CHK'D							
APPV'D							
MFG							
Q.A				MATERIAL:			DWG NO. A3
				WEIGHT:			SCALE:1:20 / SHEET 1 OF 1

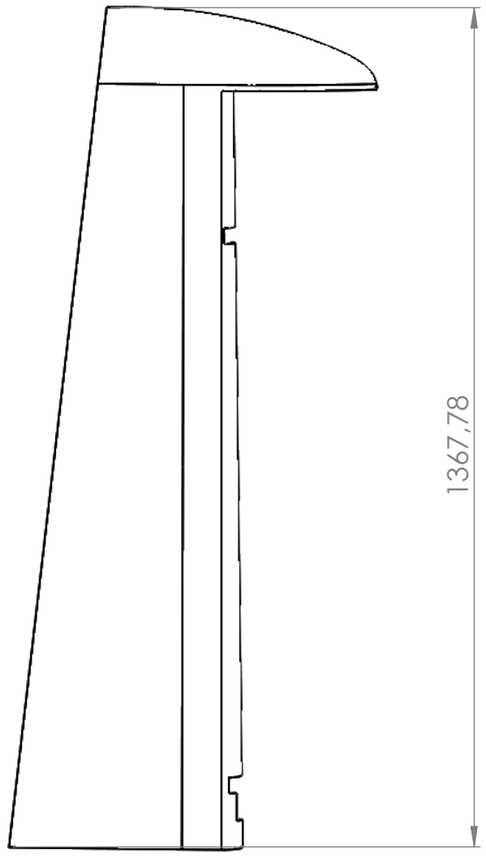

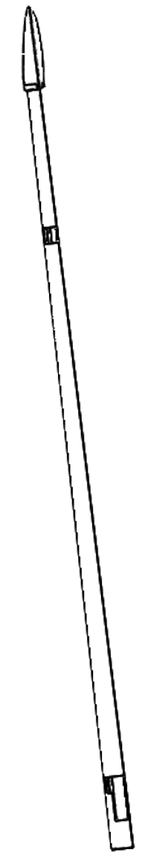

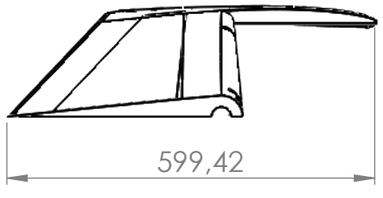

UNLESS OTHERWISE SPECIFIED: DIMENSIONS ARE IN MILLIMETERS SURFACE FINISH: TOLERANCES: LINEAR: ANGULAR:	FINISH:		DEBURR AND BREAK SHARP EDGES	DO NOT SCALE DRAWING	REVISION		
	NAME	SIGNATURE	DATE			TITLE: Labā elevatora apakšējā čaula	
DRAWN							
CHK'D							
APPV'D							
MFG							
Q.A				MATERIAL:		DWG NO.	A3
				WEIGHT:		SCALE:1:10	SHEET 1 OF 1

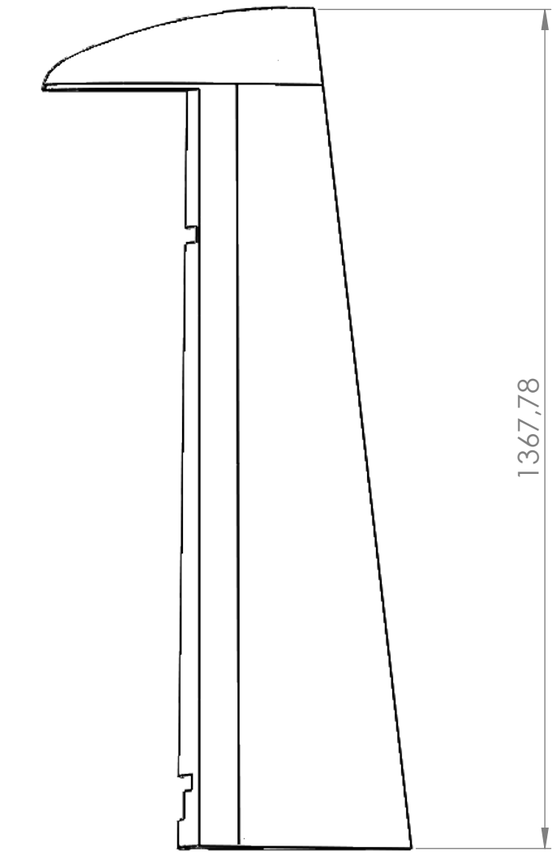



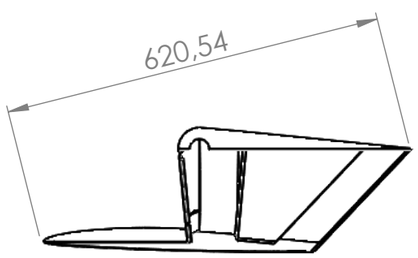

UNLESS OTHERWISE SPECIFIED: DIMENSIONS ARE IN MILLIMETERS SURFACE FINISH: TOLERANCES: LINEAR: ANGULAR:		FINISH:		DEBURR AND BREAK SHARP EDGES		DO NOT SCALE DRAWING	REVISION
	NAME	SIGNATURE	DATE			TITLE: Labā elevatora augšējā čaula	
DRAWN							
CHK'D							
APPV'D							
MFG							
Q.A				MATERIAL:		DWG NO.	A3
				WEIGHT:		SCALE:1:10	SHEET 1 OF 1

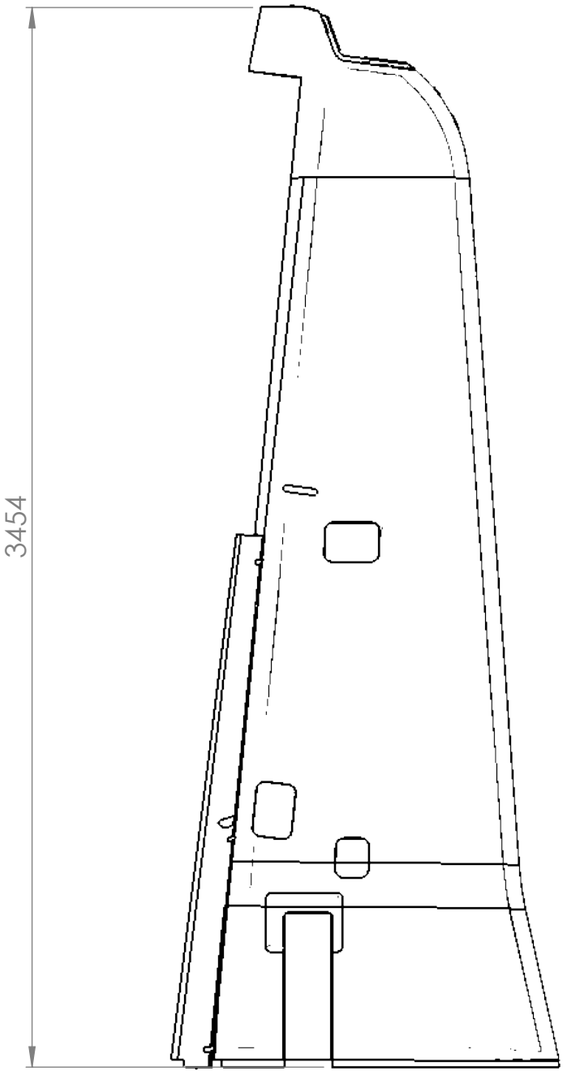

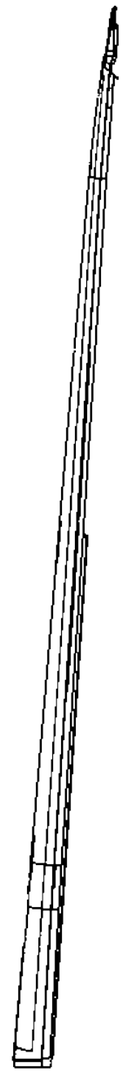

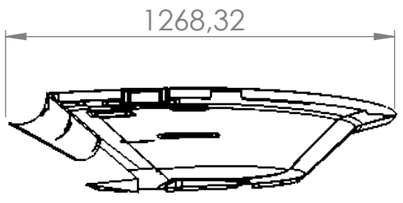

UNLESS OTHERWISE SPECIFIED: DIMENSIONS ARE IN MILLIMETERS SURFACE FINISH: TOLERANCES: LINEAR: ANGULAR:	FINISH:		DEBURR AND BREAK SHARP EDGES		DO NOT SCALE DRAWING	REVISION	
	NAME	SIGNATURE	DATE			TITLE: Labā spārna apakšējā čaula	
DRAWN							
CHK'D							
APPV'D							
MFG							
Q.A				MATERIAL:		DWG NO.	A3
				WEIGHT:		SCALE:1:50	SHEET 1 OF 1

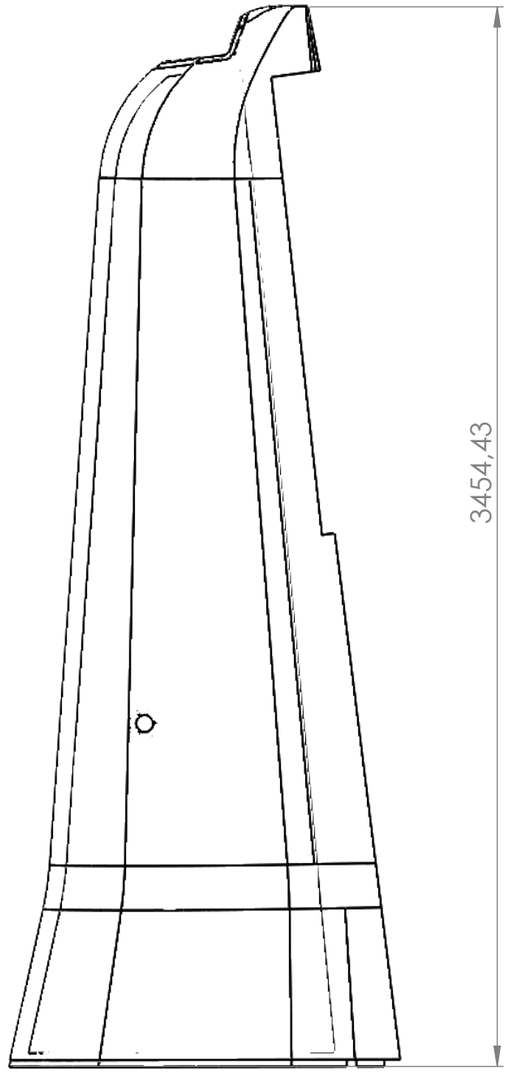



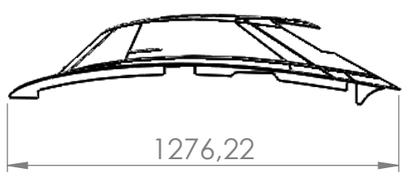

UNLESS OTHERWISE SPECIFIED: DIMENSIONS ARE IN MILLIMETERS SURFACE FINISH: TOLERANCES: LINEAR: ANGULAR:		FINISH:		DEBURR AND BREAK SHARP EDGES		DO NOT SCALE DRAWING	REVISION
	NAME	SIGNATURE	DATE			TITLE: Labā spārna augšējā čaula	
DRAWN							
CHK'D							
APPV'D							
MFG							
Q.A				MATERIAL:		DWG NO.	A3
				WEIGHT:		SCALE:1:50	SHEET 1 OF 1

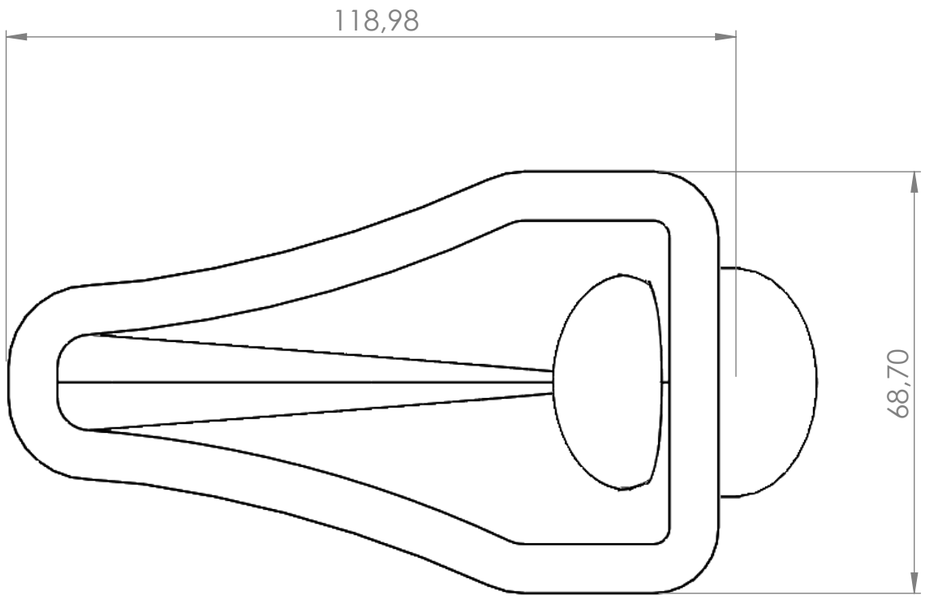

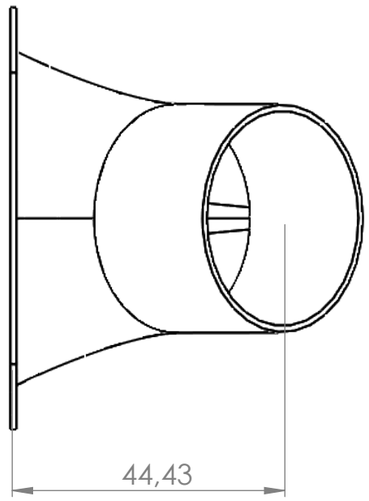

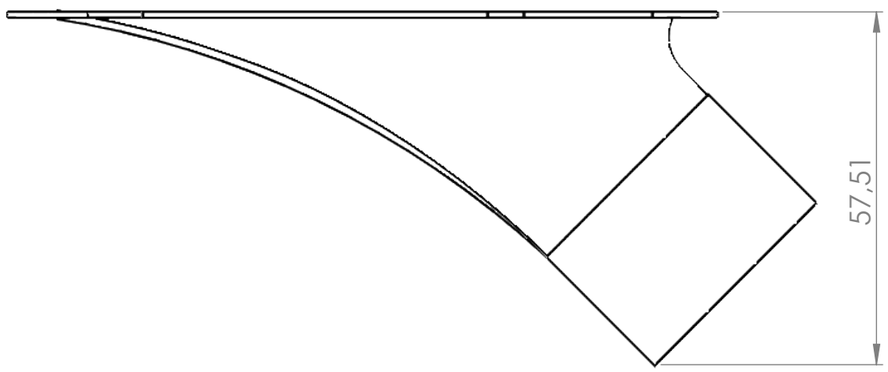

UNLESS OTHERWISE SPECIFIED: DIMENSIONS ARE IN MILLIMETERS SURFACE FINISH: TOLERANCES: LINEAR: ANGULAR:	FINISH:				DEBURR AND BREAK SHARP EDGES	DO NOT SCALE DRAWING	REVISION
	NAME	SIGNATURE	DATE			TITLE: NACA Gaisa ieplūde	
DRAWN							
CHK'D							
APPV'D							
MFG							
Q.A				MATERIAL:		DWG NO.	A3
				WEIGHT:		SCALE:1:1	SHEET 1 OF 1

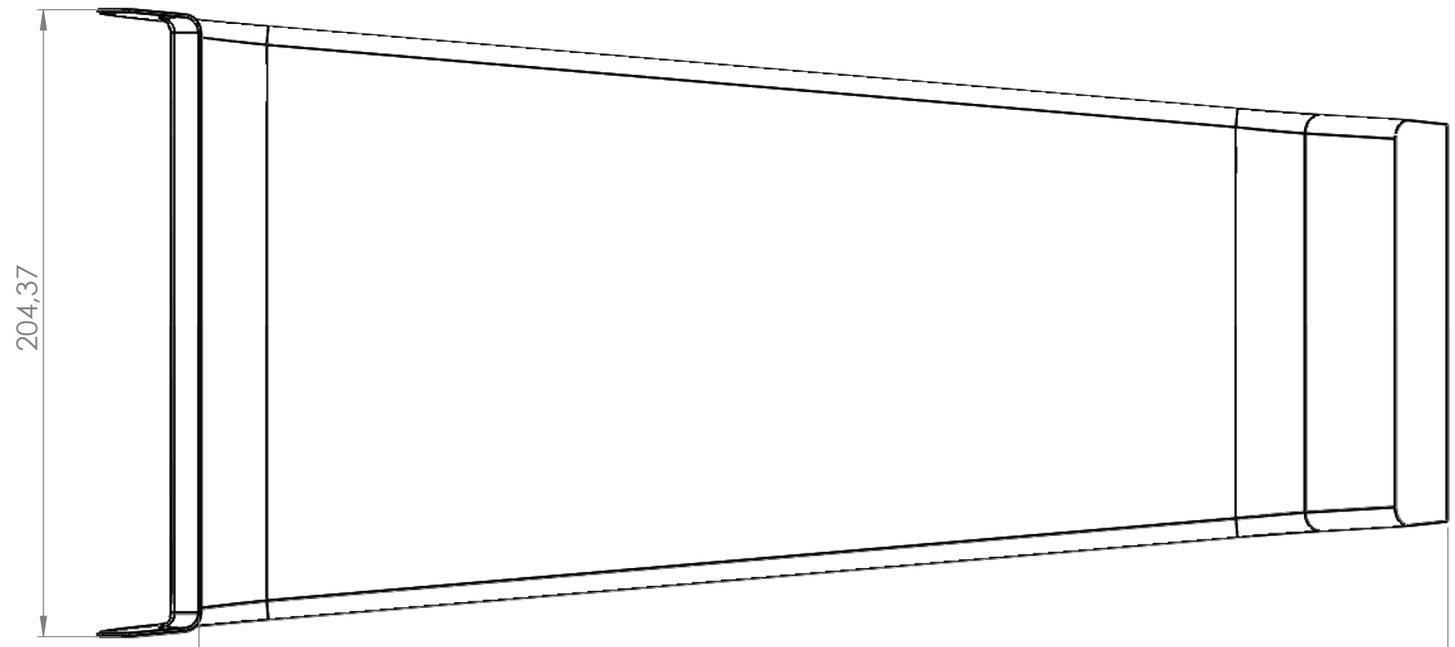

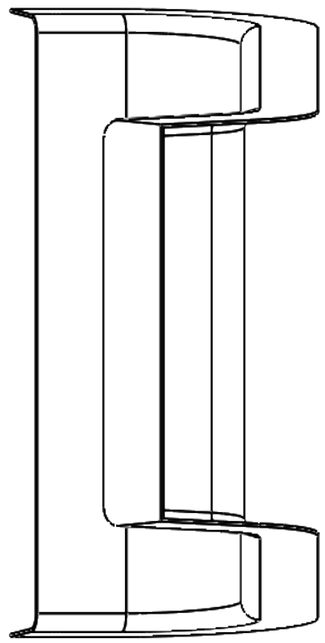

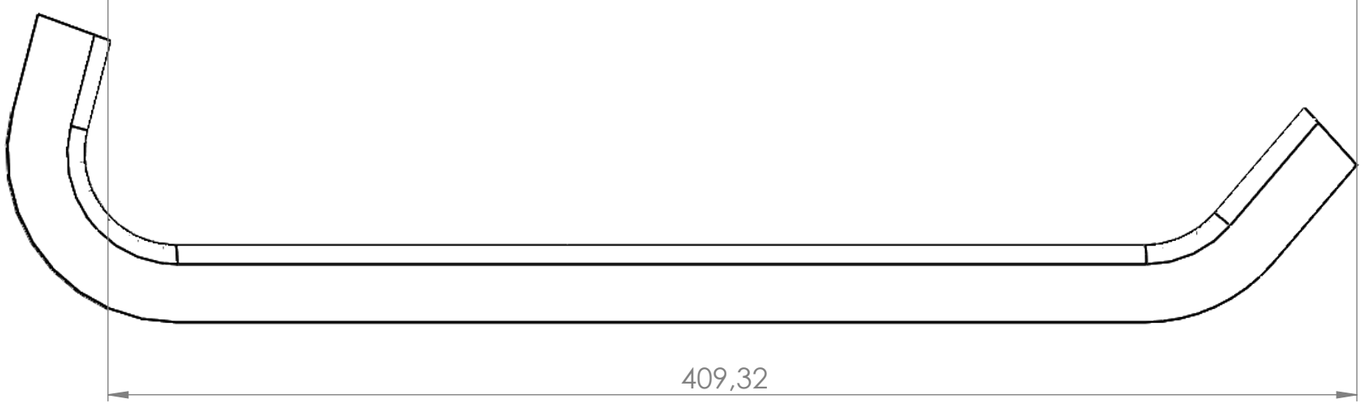

UNLESS OTHERWISE SPECIFIED: DIMENSIONS ARE IN MILLIMETERS SURFACE FINISH: TOLERANCES: LINEAR: ANGULAR:		FINISH:			DEBURR AND BREAK SHARP EDGES	DO NOT SCALE DRAWING	REVISION
	NAME	SIGNATURE	DATE			TITLE: Priekšējā konsole	
DRAWN							
CHK'D							
APPV'D							
MFG							
Q.A				MATERIAL:		DWG NO.	A3
				WEIGHT:		SCALE:1:5	SHEET 1 OF 1

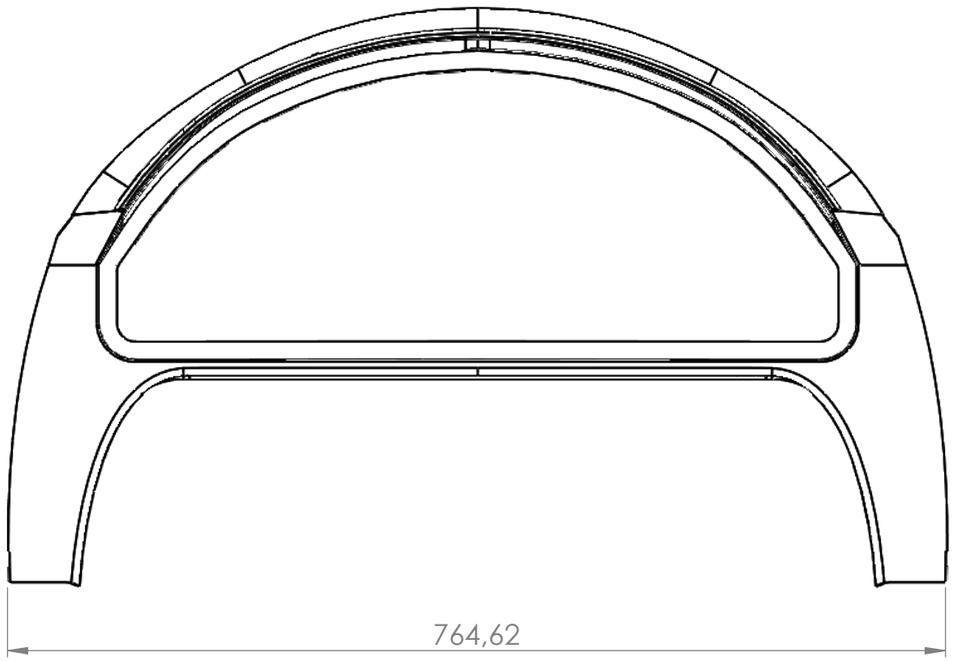

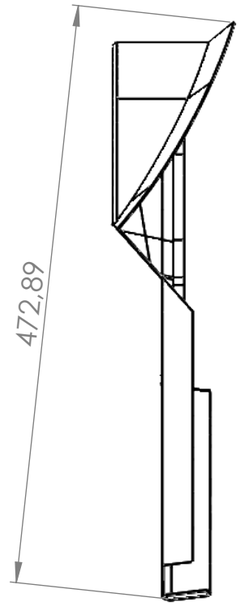

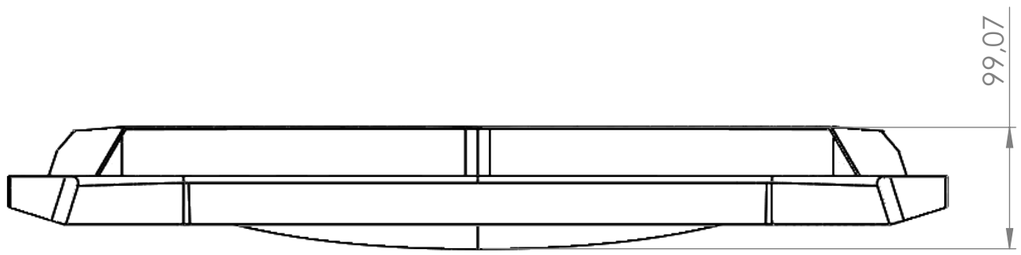

UNLESS OTHERWISE SPECIFIED: DIMENSIONS ARE IN MILLIMETERS SURFACE FINISH: TOLERANCES: LINEAR: ANGULAR:	FINISH:				DEBURR AND BREAK SHARP EDGES	DO NOT SCALE DRAWING	REVISION
	NAME	SIGNATURE	DATE			TITLE: Priekšējā paneļa rāmis	
DRAWN							
CHK'D							
APPV'D							
MFG							
Q.A				MATERIAL:		DWG NO.	A3
				WEIGHT:		SCALE:1:10	SHEET 1 OF 1

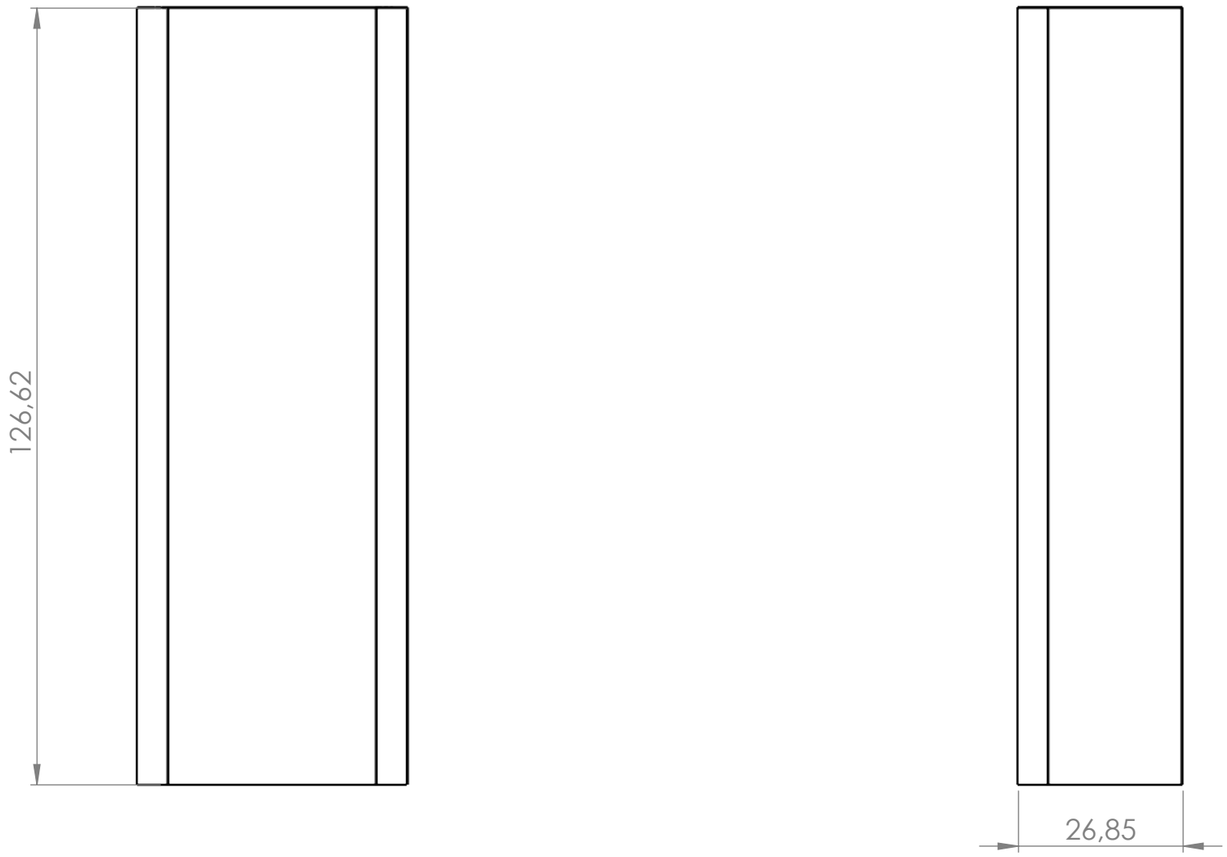

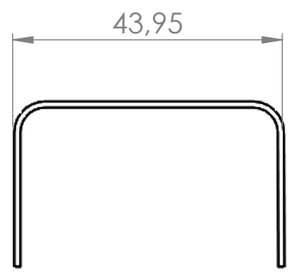

UNLESS OTHERWISE SPECIFIED: DIMENSIONS ARE IN MILLIMETERS SURFACE FINISH: TOLERANCES: LINEAR: ANGULAR:	FINISH:				DEBURR AND BREAK SHARP EDGES	DO NOT SCALE DRAWING	REVISION
	NAME	SIGNATURE	DATE			TITLE: Priekšējā sēdekļa atbalsta detaļa	
DRAWN							
CHK'D							
APPV'D							
MFG							
Q.A				MATERIAL:		DWG NO.	A3
				WEIGHT:		SCALE:1:2	SHEET 1 OF 1

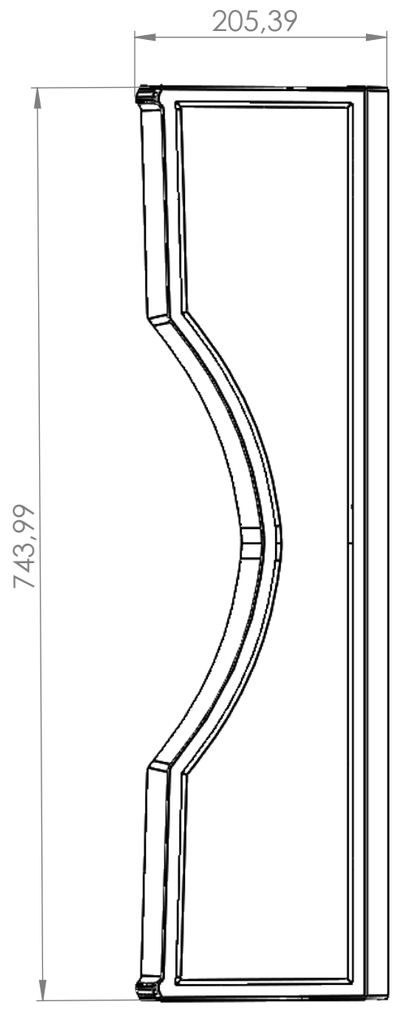



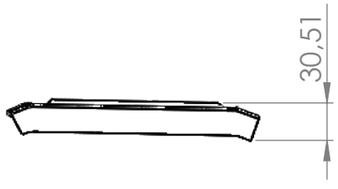

UNLESS OTHERWISE SPECIFIED: DIMENSIONS ARE IN MILLIMETERS SURFACE FINISH: TOLERANCES: LINEAR: ANGULAR:		FINISH:			DEBURR AND BREAK SHARP EDGES	DO NOT SCALE DRAWING	REVISION
	NAME	SIGNATURE	DATE			TITLE: Priekšējā sēdekļa palīgdetaļa	
DRAWN							
CHK'D							
APPV'D							
MFG							
Q.A				MATERIAL:		DWG NO.	A3
				WEIGHT:		SCALE:1:5	SHEET 1 OF 1

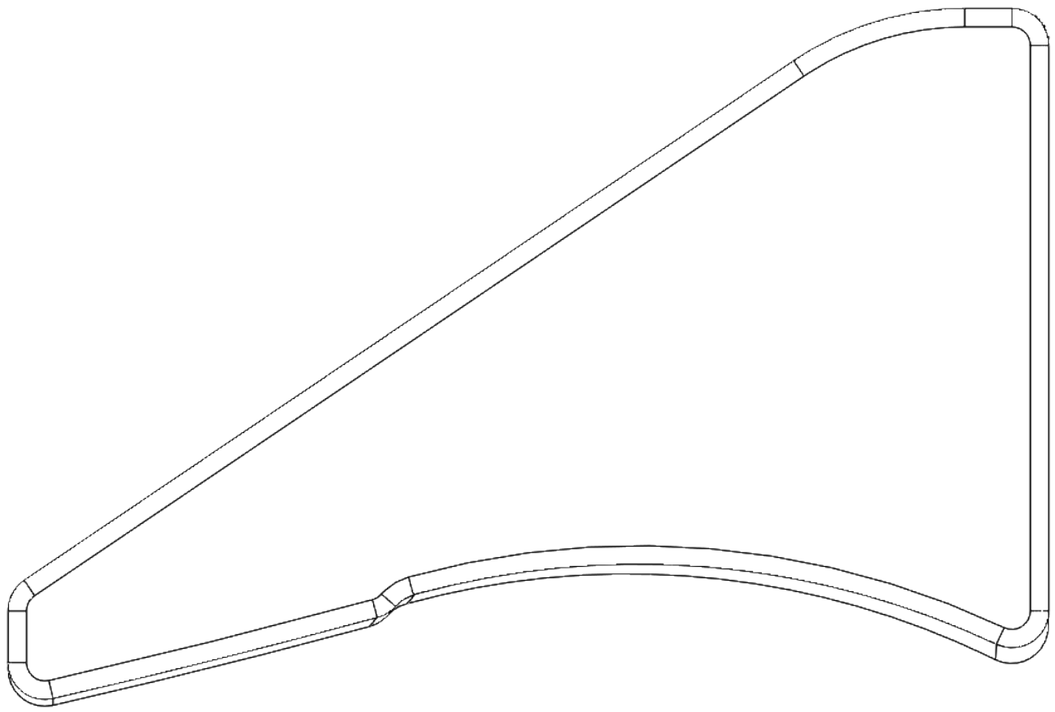

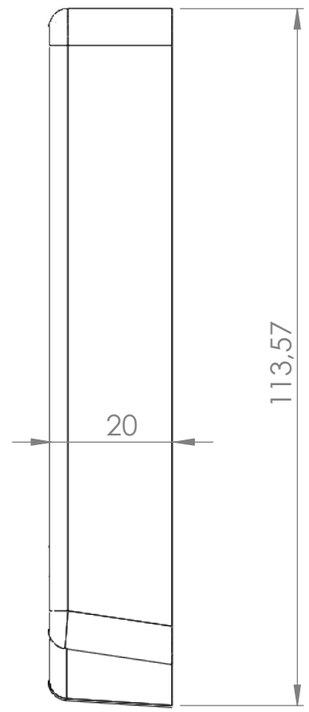

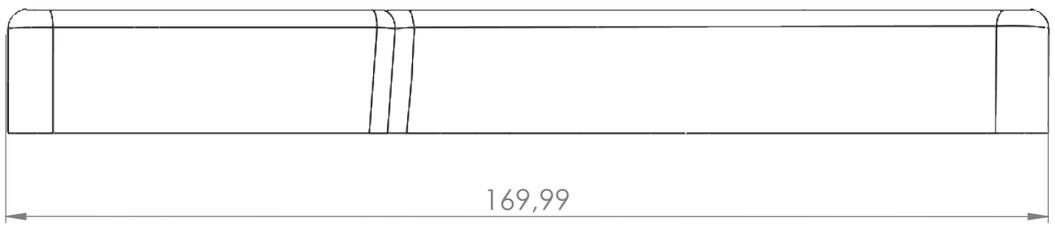

Kreisā aizmugurējā trīsstūrveida pastiprinošā riba ir spoguļattēlā

UNLESS OTHERWISE SPECIFIED: DIMENSIONS ARE IN MILLIMETERS SURFACE FINISH: TOLERANCES: LINEAR: ANGULAR:		FINISH:		DEBURR AND BREAK SHARP EDGES		DO NOT SCALE DRAWING	REVISION
	NAME	SIGNATURE	DATE			TITLE: Labā aizmugurējā trīsstūrveida pastiprinošā riba	
DRAWN							
CHK'D							
APPV'D							
MFG							
Q.A				MATERIAL:		DWG NO.	A3
				WEIGHT:		SCALE:1:2	SHEET 1 OF 1

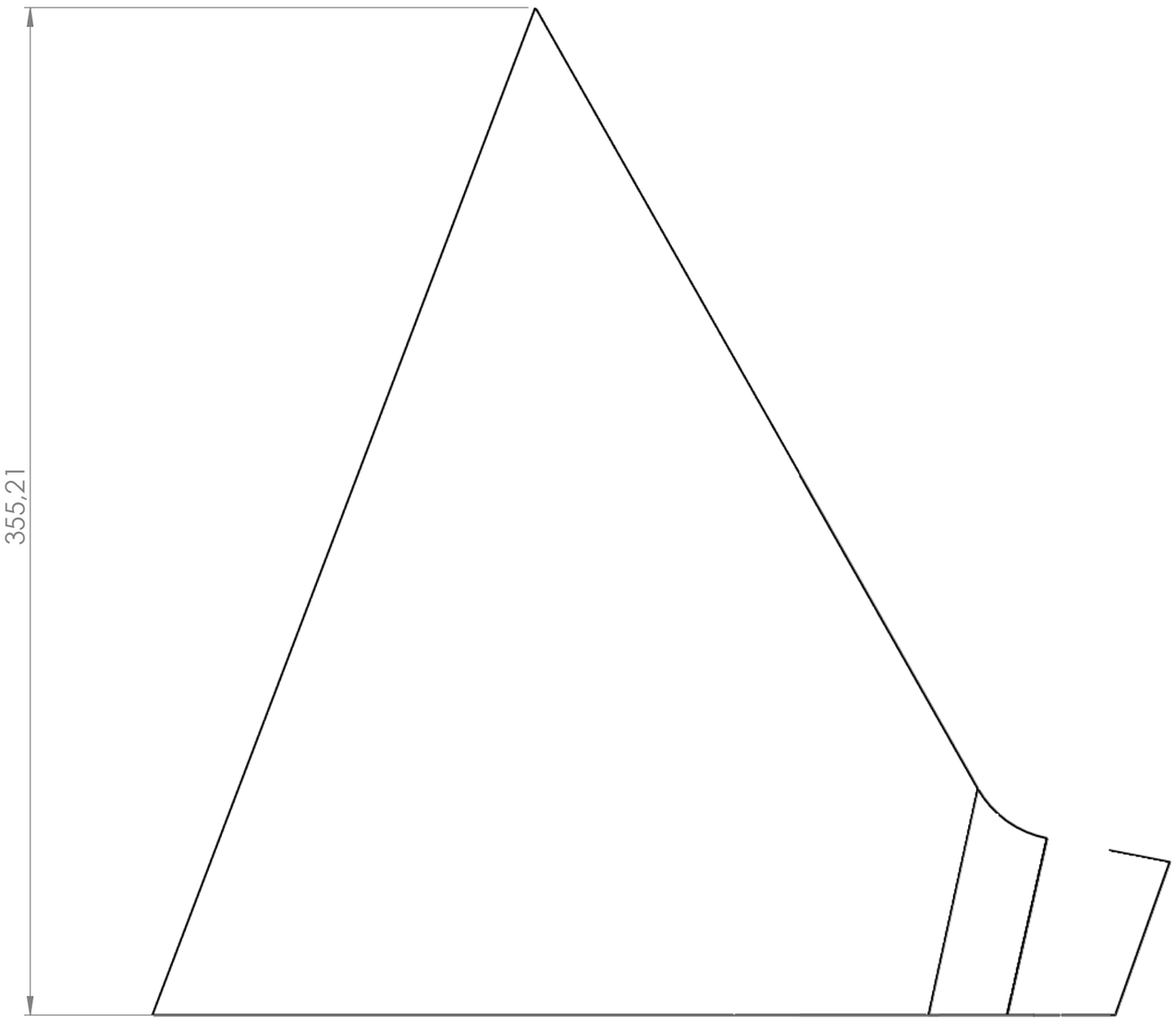



Priekšējās konsoles labā nosegdetaļa ir spoguļattēlā

UNLESS OTHERWISE SPECIFIED: DIMENSIONS ARE IN MILLIMETERS SURFACE FINISH: TOLERANCES: LINEAR: ANGULAR:		FINISH:		DEBURR AND BREAK SHARP EDGES		DO NOT SCALE DRAWING	REVISION
	NAME	SIGNATURE	DATE			TITLE: Priekšējās konsoles kreisā nosegdetaļa	
DRAWN							
CHK'D							
APPV'D							
MFG							
Q.A				MATERIAL:		DWG NO.	A3
				WEIGHT:		SCALE:1:20	SHEET 1 OF 1

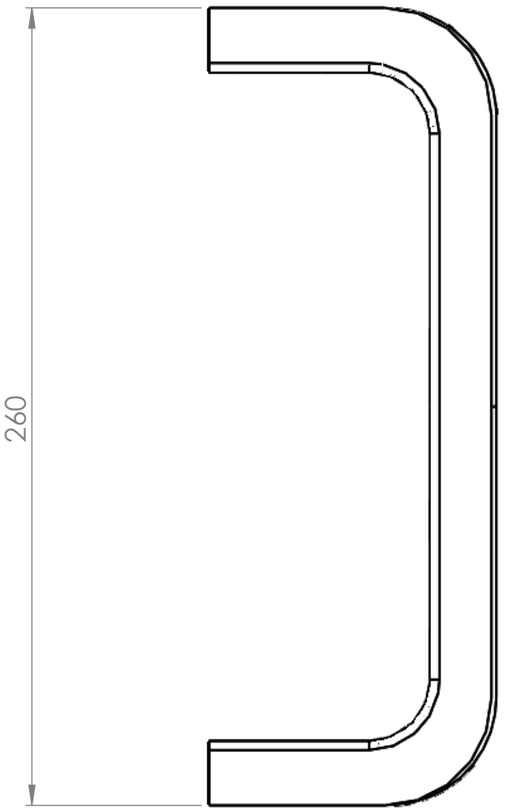

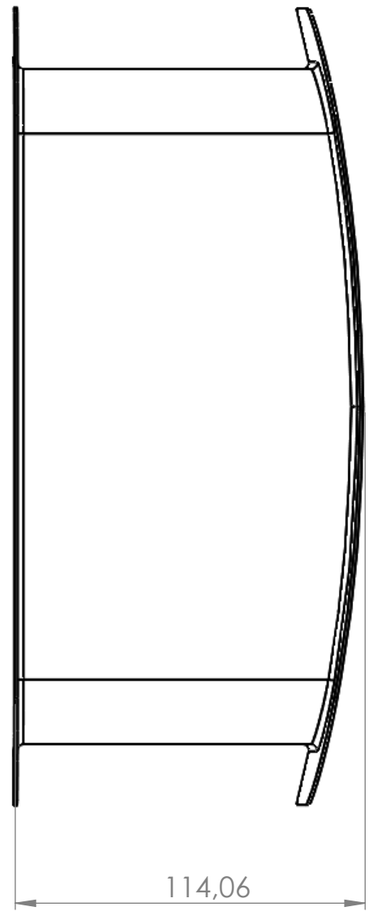

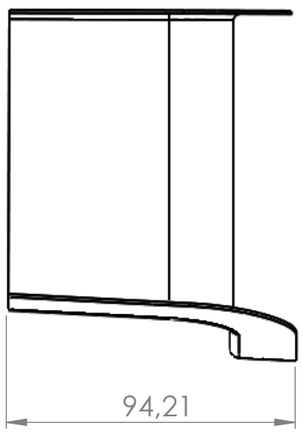

UNLESS OTHERWISE SPECIFIED: DIMENSIONS ARE IN MILLIMETERS SURFACE FINISH: TOLERANCES: LINEAR: ANGULAR:	FINISH:		DEBURR AND BREAK SHARP EDGES	DO NOT SCALE DRAWING	REVISION		
	NAME	SIGNATURE	DATE	TITLE: Priekšējās šasijas aizmugurējā nosegdetaļa			
DRAWN							
CHK'D							
APPV'D							
MFG							
Q.A				MATERIAL:	DWG NO.	A3	
				WEIGHT:	SCALE:1:20	SHEET 1 OF 1	

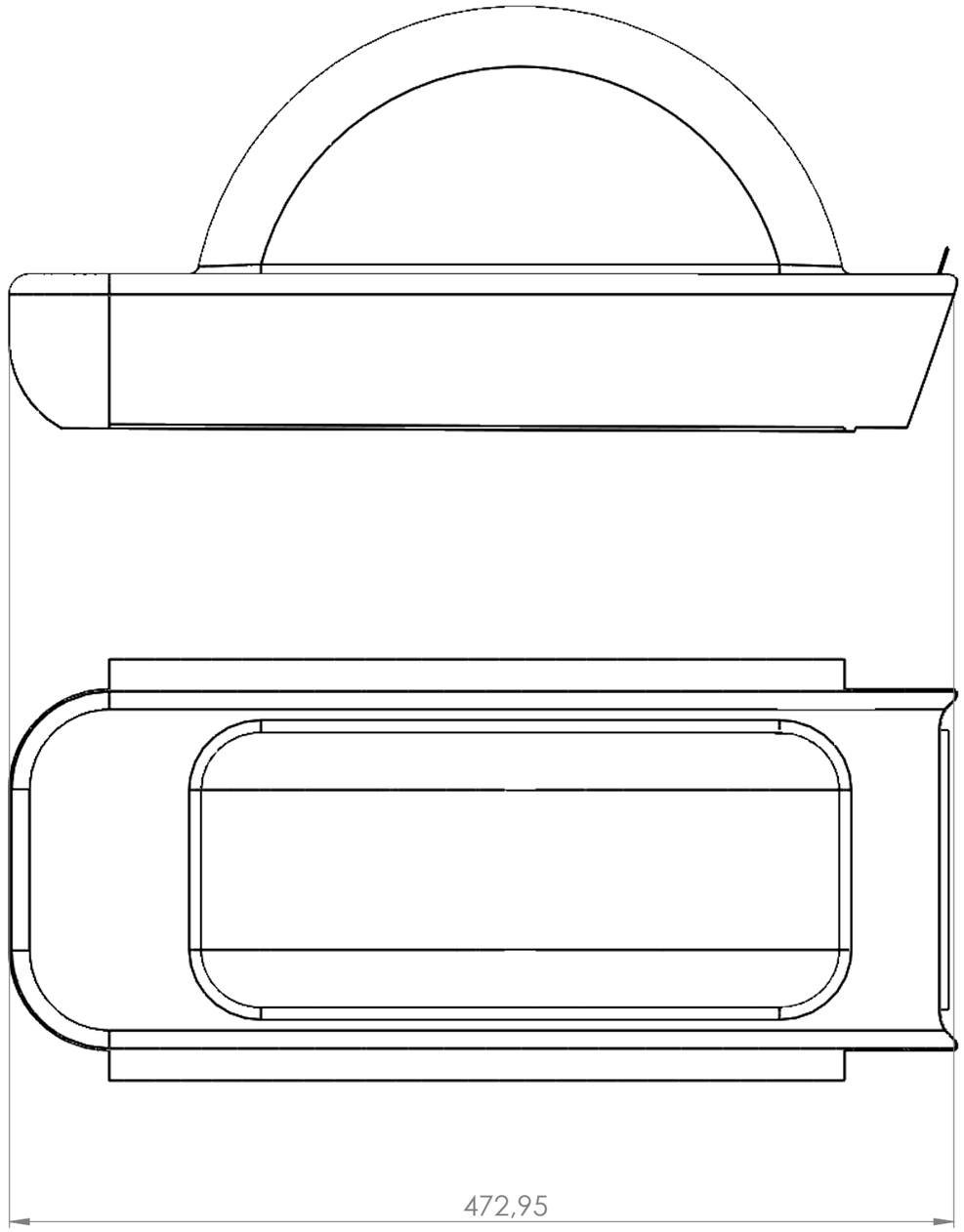

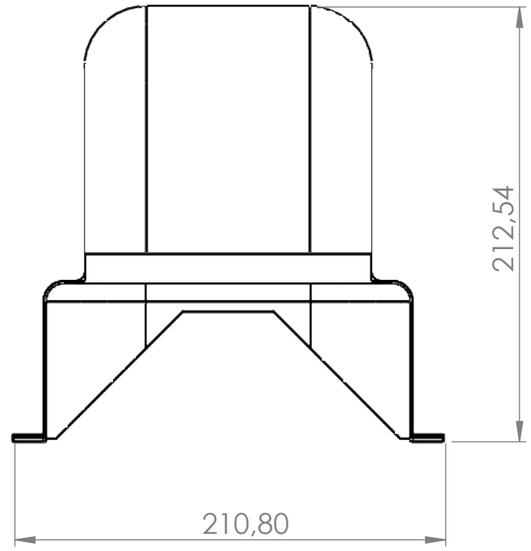

UNLESS OTHERWISE SPECIFIED: DIMENSIONS ARE IN MILLIMETERS SURFACE FINISH: TOLERANCES: LINEAR: ANGULAR:		FINISH:		DEBURR AND BREAK SHARP EDGES		DO NOT SCALE DRAWING	REVISION
	NAME	SIGNATURE	DATE			TITLE: Priekšējās šasijas nodalījums	
DRAWN							
CHK'D							
APPV'D							
MFG							
Q.A				MATERIAL:		DWG NO.	A3
				WEIGHT:		SCALE:1:5	SHEET 1 OF 1

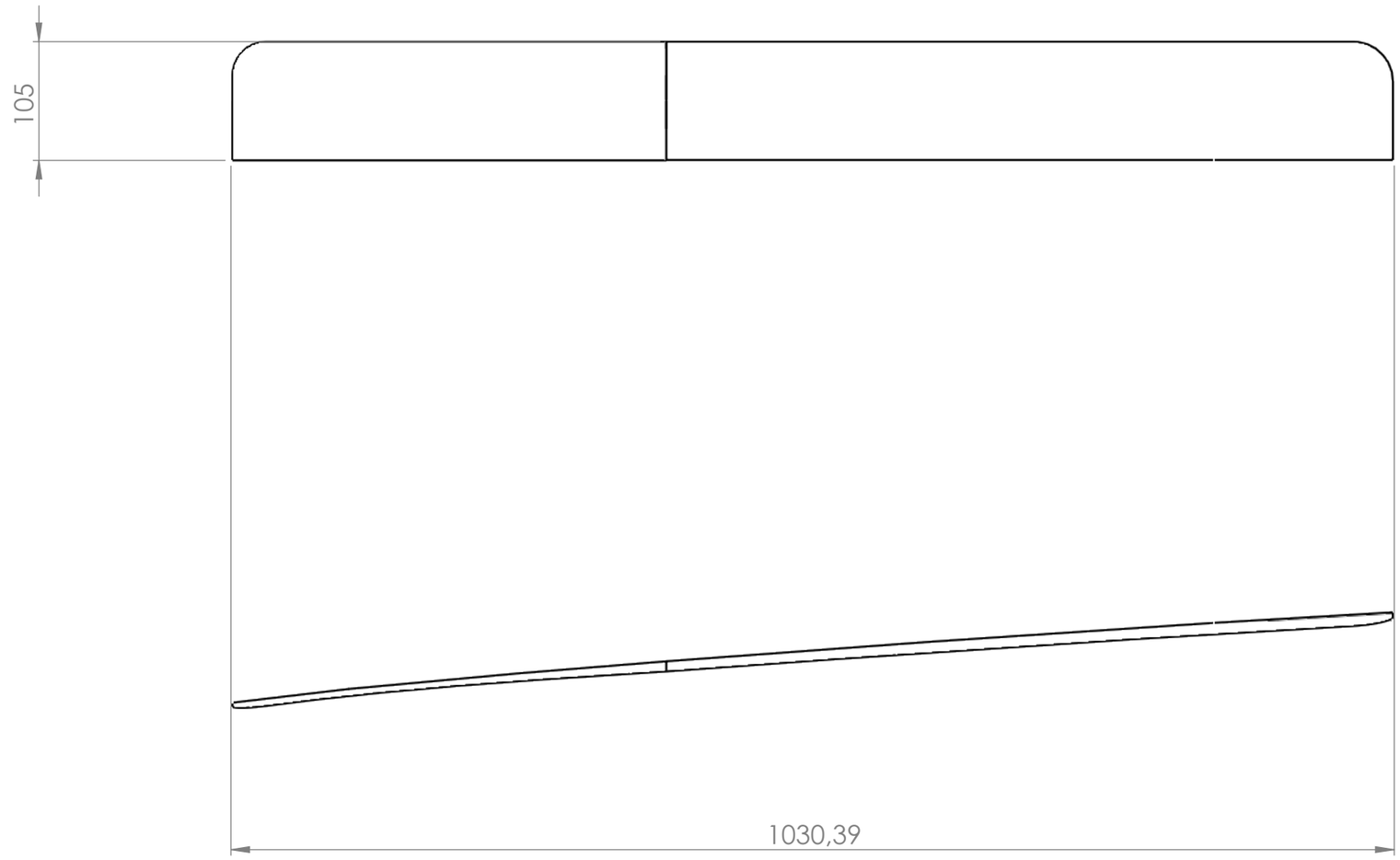

Priekšējās šasijas labā nosegdetaļa ir spoguļattēlā

UNLESS OTHERWISE SPECIFIED: DIMENSIONS ARE IN MILLIMETERS SURFACE FINISH: TOLERANCES: LINEAR: ANGULAR:	FINISH:			DEBURR AND BREAK SHARP EDGES	DO NOT SCALE DRAWING	REVISION
	NAME	SIGNATURE	DATE		TITLE: Priekšējās šasijas kreisā nosegdetaļa	
DRAWN						
CHK'D						
APPV'D						
MFG						
Q.A				MATERIAL:	DWG NO.	A3
				WEIGHT:	SCALE:1:20	SHEET 1 OF 1

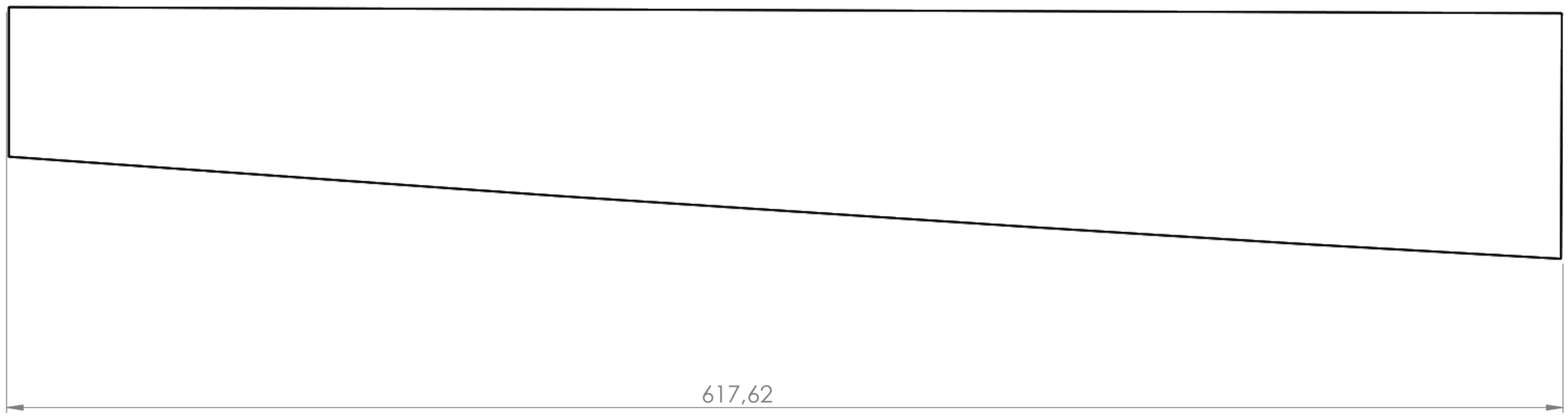



Priekšējās šasijas kreisā nosegdetaļa ir spoguļattēlā

UNLESS OTHERWISE SPECIFIED: DIMENSIONS ARE IN MILLIMETERS SURFACE FINISH: TOLERANCES: LINEAR: ANGULAR:		FINISH:			DEBURR AND BREAK SHARP EDGES	DO NOT SCALE DRAWING	REVISION
	NAME	SIGNATURE	DATE			TITLE: Priekšējās šasijas labā nosegdetaļa	
DRAWN							
CHK'D							
APPV'D							
MFG							
Q.A				MATERIAL:		DWG NO.	A3
				WEIGHT:		SCALE:1:20	SHEET 1 OF 1

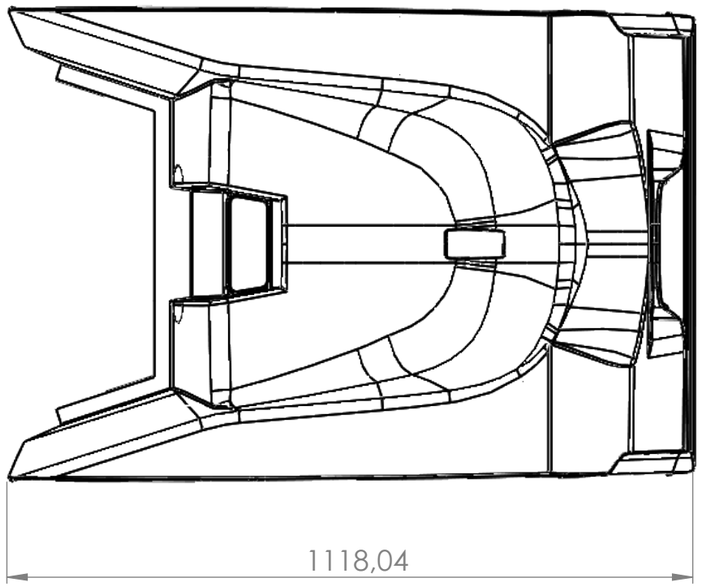

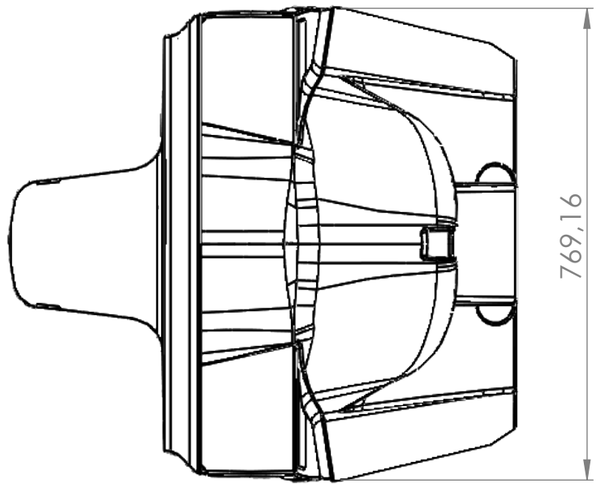

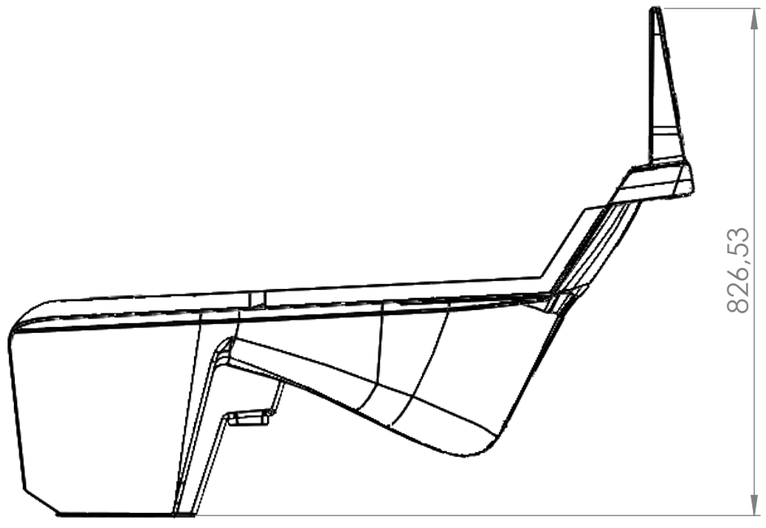

UNLESS OTHERWISE SPECIFIED: DIMENSIONS ARE IN MILLIMETERS SURFACE FINISH: TOLERANCES: LINEAR: ANGULAR:	FINISH:			DEBURR AND BREAK SHARP EDGES	DO NOT SCALE DRAWING	REVISION	
	NAME	SIGNATURE	DATE			TITLE:	
DRAWN						Priekšējais sēdeklis	
CHK'D							
APPV'D							
MFG							
Q.A				MATERIAL:		DWG NO.	A3
				WEIGHT:		SCALE:1:20	SHEET 1 OF 1

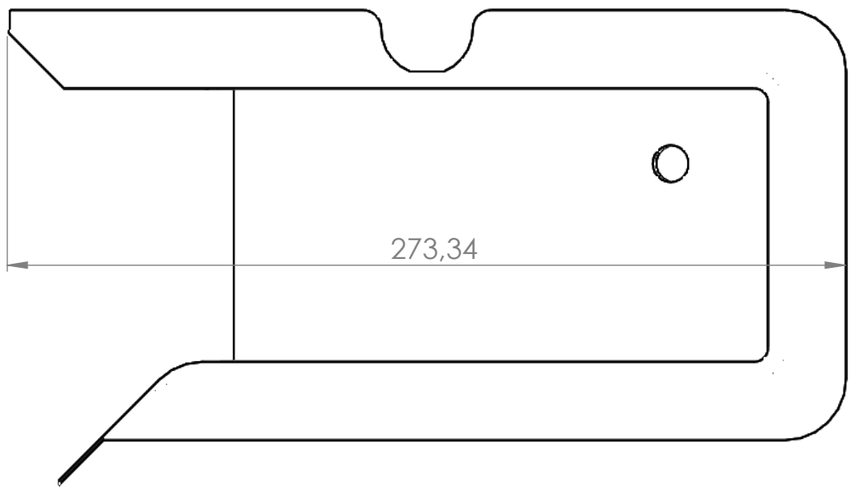

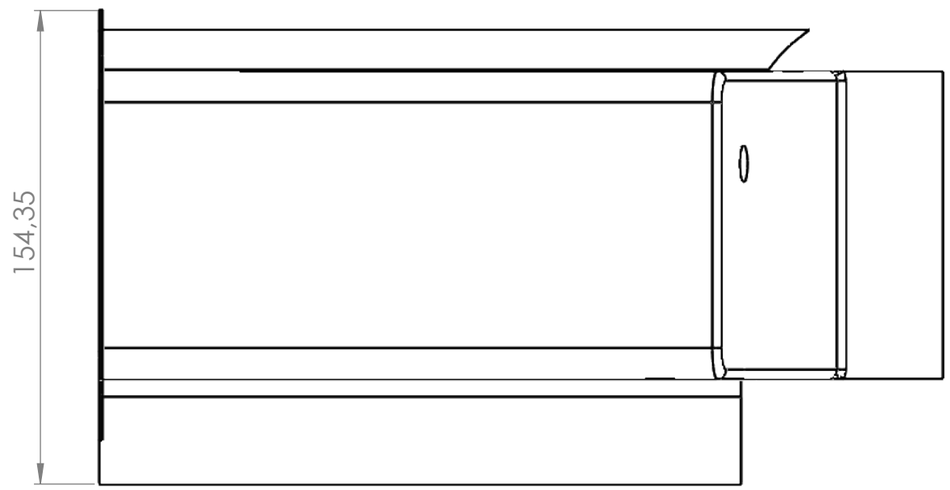

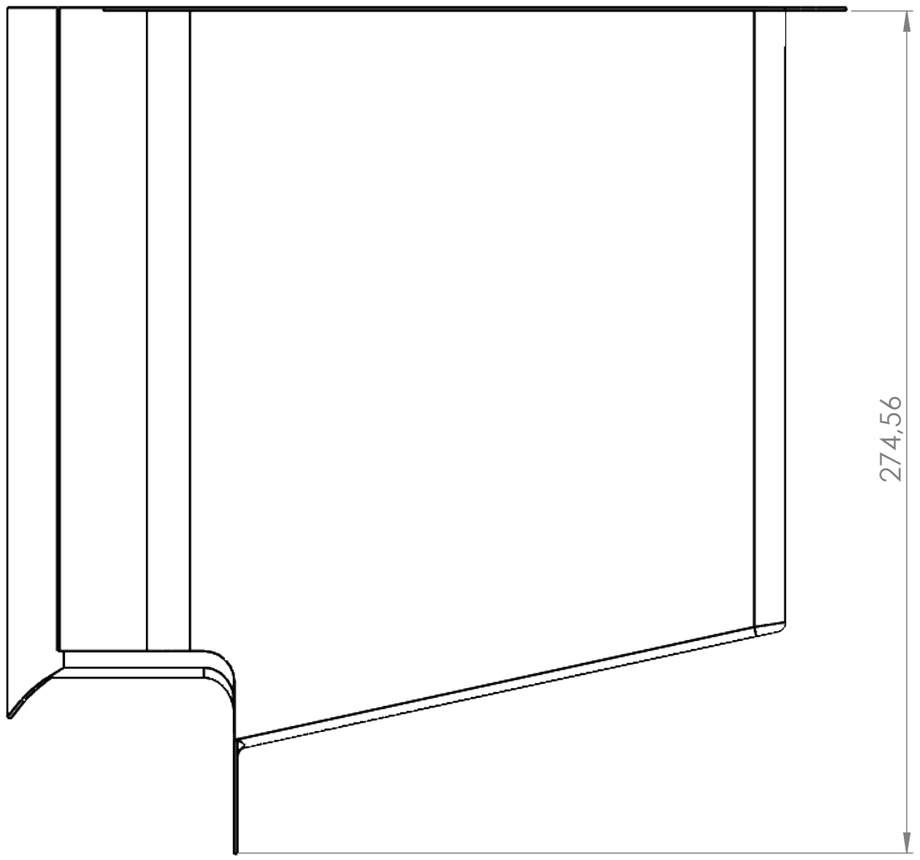

UNLESS OTHERWISE SPECIFIED: DIMENSIONS ARE IN MILLIMETERS SURFACE FINISH: TOLERANCES: LINEAR: ANGULAR:		FINISH:			DEBURR AND BREAK SHARP EDGES	DO NOT SCALE DRAWING	REVISION
	NAME	SIGNATURE	DATE			TITLE: Reduktora balsts	
DRAWN							
CHK'D							
APPV'D							
MFG							
Q.A				MATERIAL:		DWG NO.	A3
				WEIGHT:		SCALE:1:5	SHEET 1 OF 1

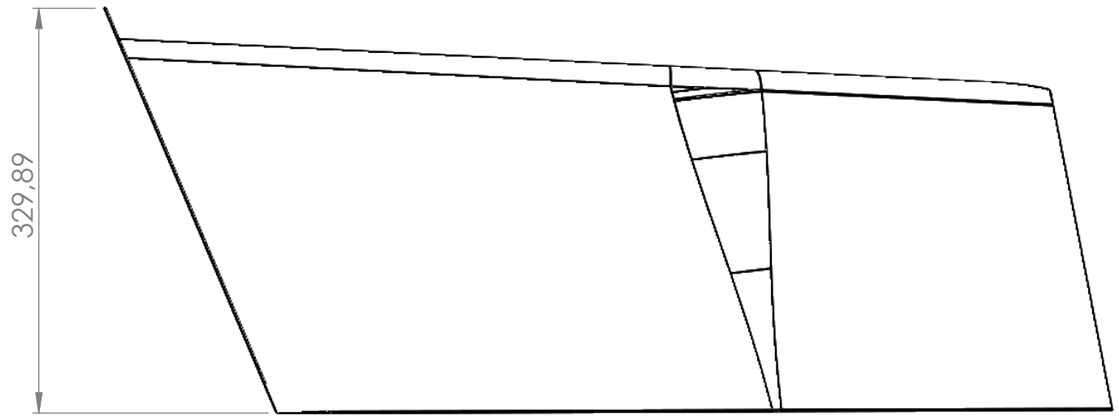

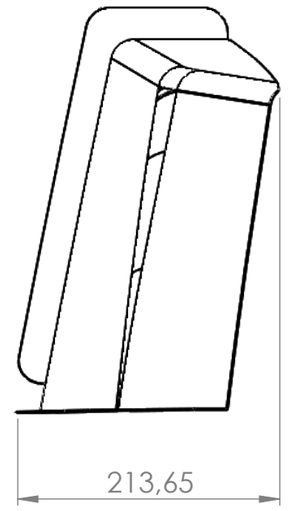

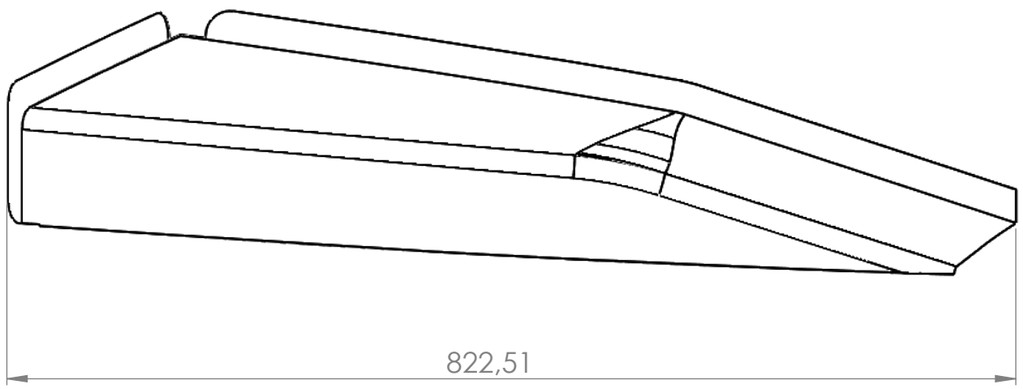

Labais roku balsts ir spoguļattēlā

UNLESS OTHERWISE SPECIFIED: DIMENSIONS ARE IN MILLIMETERS SURFACE FINISH: TOLERANCES: LINEAR: ANGULAR:		FINISH:			DEBURR AND BREAK SHARP EDGES	DO NOT SCALE DRAWING	REVISION
	NAME	SIGNATURE	DATE			TITLE: Kreisais roku balsts	
DRAWN							
CHK'D							
APPV'D							
MFG							
Q.A				MATERIAL:		DWG NO.	A3
				WEIGHT:		SCALE:1:10	SHEET 1 OF 1

DATE	REV	AUTHOR	DESCRIPTION

Šasiju nodalījuma kreisā aizmugurējā riba	rasējumā
Šasiju nodalījuma labā aizmugurējā riba	pretēji

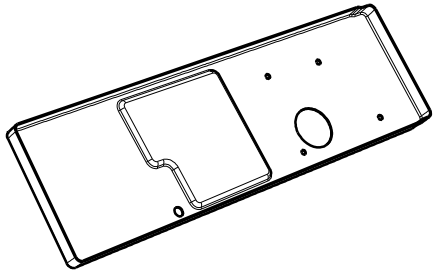

VIEW: ISO
Scale: 1:3

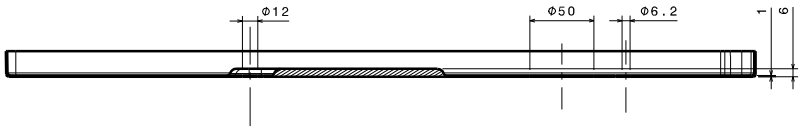

VIEW SECTION: A-A
Scale: 1:2

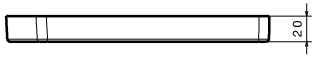

VIEW: B
Scale: 1:2

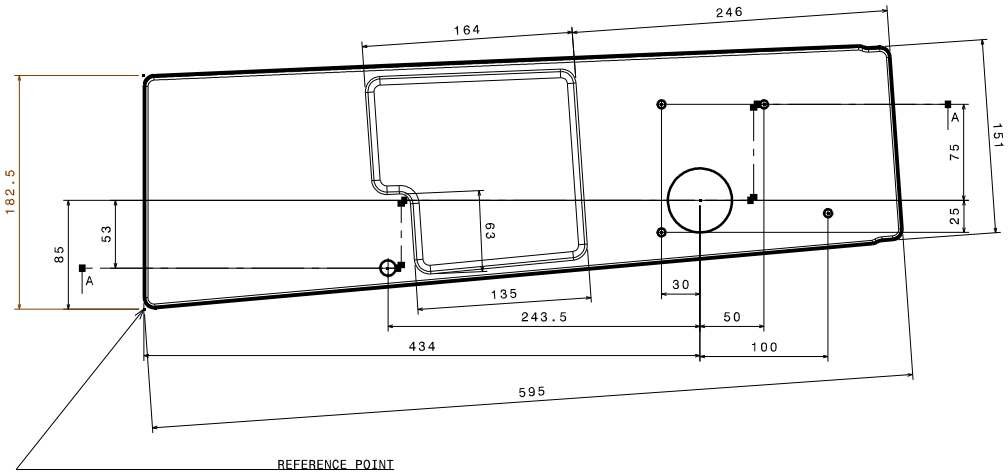

REFERENCE POINT

CAD SYSTEM: CATIA V5	FIRST ANGLE ROTATION	Šasiju nodalījuma aizmugurējā riba	DWG SEE TABLE
DRAWN:	DATE		SCALE: 1:2 SHEET:1/1 SIZE: A1
CHECKED:	DATE		REV
STRESS:	DATE		
CFB:	DATE		
SYSTEM:	DATE	QUANTITY: 1+1	
MATERIALS: CARBON FIBER	DATE	IDENTIFY:	TOLERANCES:
PROCESSES:	DATE	FEMOVE ALL SHARP EDGES 0+0.2-0.4	RIVETS INST:
APPROVED:	DATE	ROUGHNESS:	BOLT INST:
AUTHORIZED:	DATE	REMOVE/REARING INST.:	REF. 3D FILE: XX-

This drawing is S.I.A.PELEGRIN property and cannot be used in any way without written authorization

DATE	REV	AUTHOR	DESCRIPTION

Šasiju nodalījuma kreisā priekšējā riba	rasējumā
Šasiju nodalījuma labā priekšējā riba	pretēji

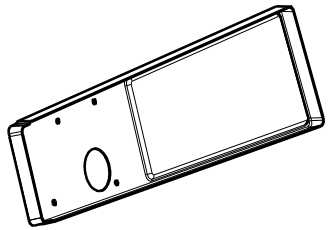

VIEW: ISO
Scale: 1:3

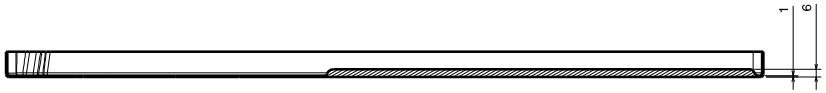

VIEW SECTION: A-A
Scale: 1:2

WARNING! this rib has to be done the opposite of the other

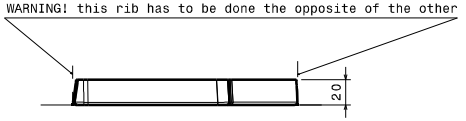

VIEW: B
Scale: 1:2

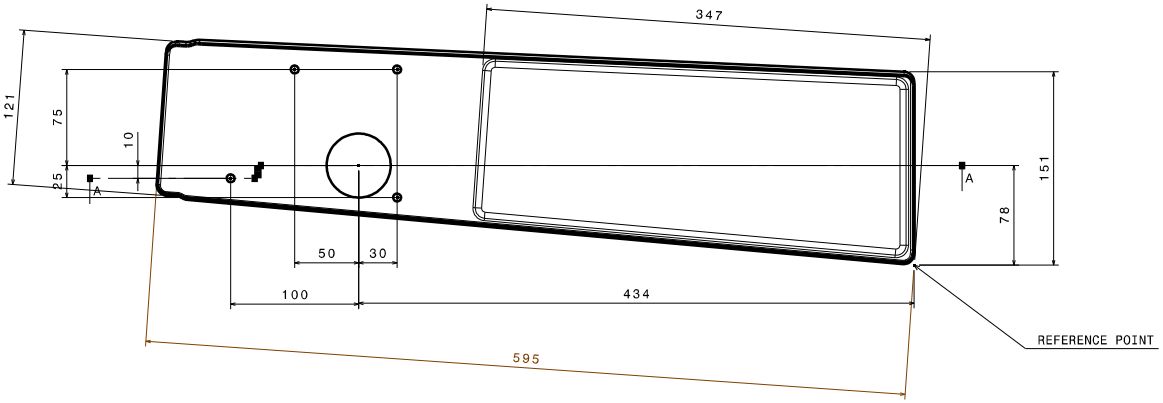

CAD SYSTEM: CATIA V5		ROBERT MAULE ROTATION	Šasiju nodalījuma priekšējā riba	DWG. SEE TABLE
DRAWN:	DATE			SCALE: 1:2 SHEET:1/1 SIZE: A1
CHECKED:	DATE			REV.
STRESS:	DATE			
CFD:	DATE			
SYSTEM:	DATE	QUANTITY: 1+1		
MATERIALS: CARBON FIBER	DATE	IDENTIFY:	TOLERANCES:	
PROCESSES:	DATE	REMOVE ALL SHARP EDGES 0×0.2-0.4	RIVETS INST.:	
APPROVED:	DATE	ROUGHNESS:	BOL. INST.:	
AUTHORIZED:	DATE	BENDING/BEARING INST.:	REF. 3D FILE: XX	

This drawing is S.I.A.PELEGRIN property and cannot be used in any way without written authorization

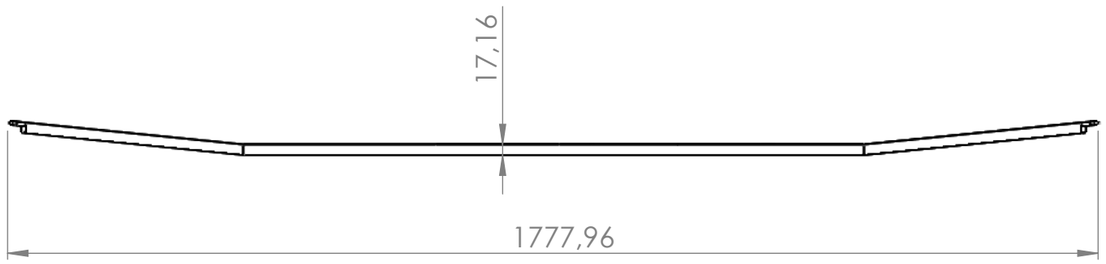



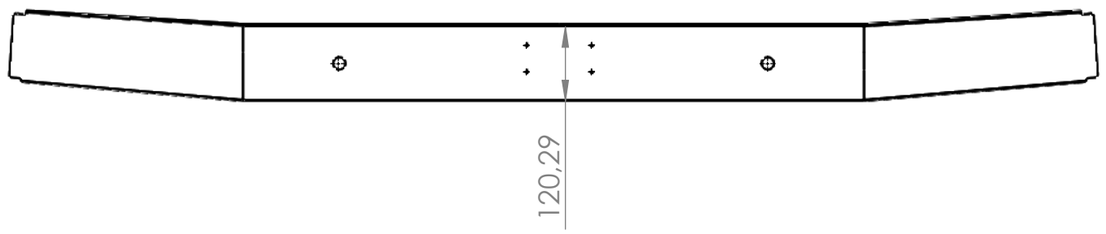

UNLESS OTHERWISE SPECIFIED: DIMENSIONS ARE IN MILLIMETERS SURFACE FINISH: TOLERANCES: LINEAR: ANGULAR:		FINISH:			DEBURR AND BREAK SHARP EDGES	DO NOT SCALE DRAWING	REVISION
	NAME	SIGNATURE	DATE			TITLE: Spārna aizmugurējā lonžerona papilddetaļa	
DRAWN							
CHK'D							
APPV'D							
MFG							
Q.A				MATERIAL:		DWG NO.	A3
				WEIGHT:		SCALE:1:20	SHEET 1 OF 1

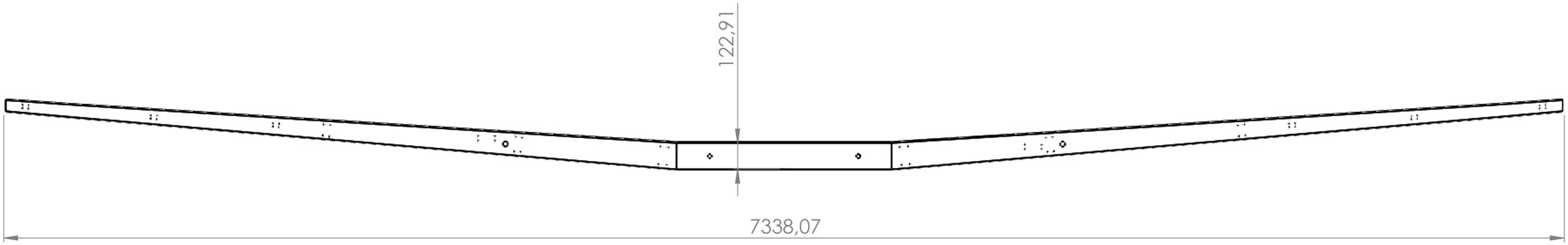

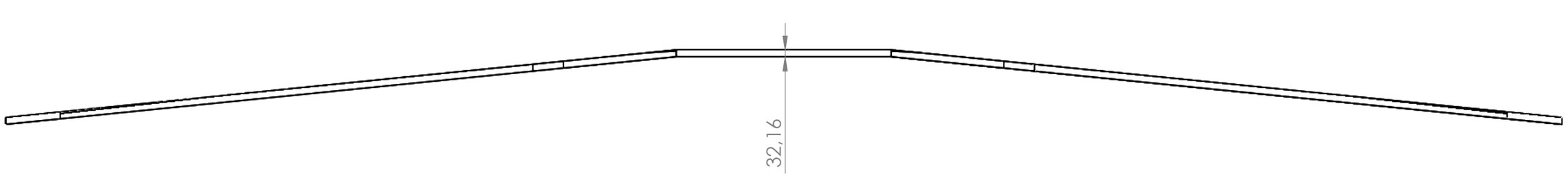

UNLESS OTHERWISE SPECIFIED: DIMENSIONS ARE IN MILLIMETERS SURFACE FINISH: TOLERANCES: LINEAR: ANGULAR:		FINISH:			DEBURR AND BREAK SHARP EDGES	DO NOT SCALE DRAWING	REVISION
	NAME	SIGNATURE	DATE			TITLE: Spārna aizmugurējais lonžerons	
DRAWN							
CHK'D							
APPV'D							
MFG							
Q.A				MATERIAL:		DWG NO.	A3
				WEIGHT:		SCALE:1:50	SHEET 1 OF 1

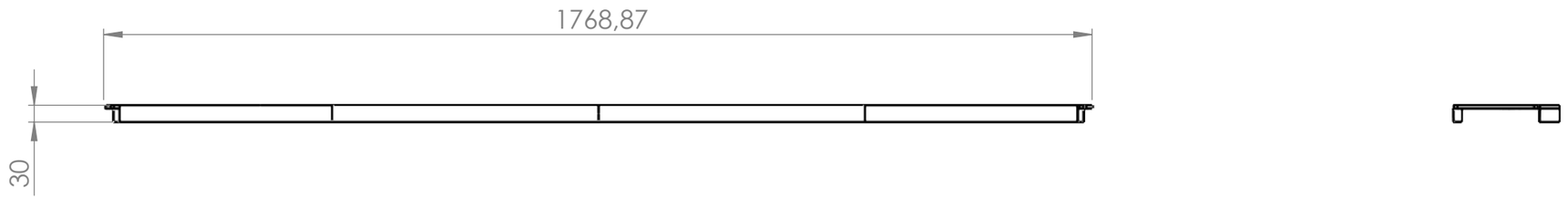

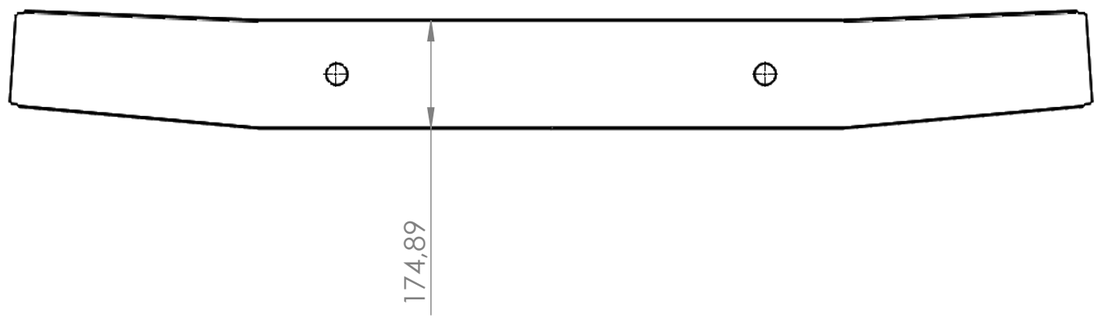

UNLESS OTHERWISE SPECIFIED: DIMENSIONS ARE IN MILLIMETERS SURFACE FINISH: TOLERANCES: LINEAR: ANGULAR:		FINISH:				DEBURR AND BREAK SHARP EDGES	DO NOT SCALE DRAWING	REVISION
	NAME	SIGNATURE	DATE				TITLE: Spārna galvenā lonžerona papilddetaļa	
DRAWN								
CHK'D								
APPV'D								
MFG								
Q.A				MATERIAL:			DWG NO.	A3
				WEIGHT:			SCALE:1:20	SHEET 1 OF 1

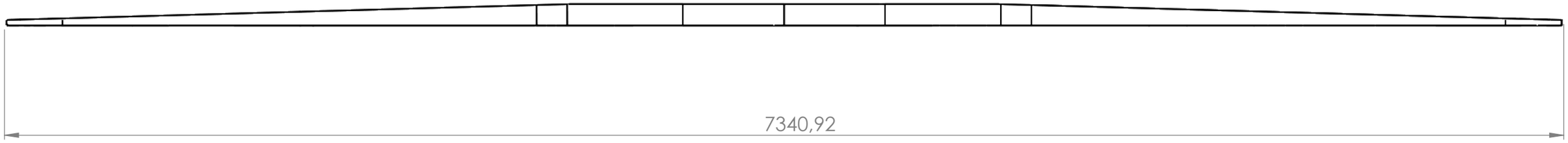

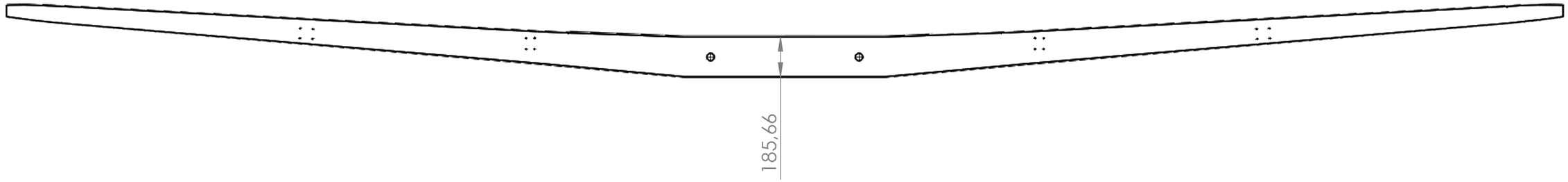

UNLESS OTHERWISE SPECIFIED: DIMENSIONS ARE IN MILLIMETERS SURFACE FINISH: TOLERANCES: LINEAR: ANGULAR:	FINISH:		DEBURR AND BREAK SHARP EDGES	DO NOT SCALE DRAWING	REVISION		
	NAME	SIGNATURE	DATE	TITLE: Spārna galvenais lonžerons			
DRAWN							
CHK'D							
APPV'D							
MFG							
Q.A				MATERIAL:	DWG NO.	A3	
				WEIGHT:	SCALE:1:50	SHEET 1 OF 1	

DATE	REV	AUTHOR	DESCRIPTION

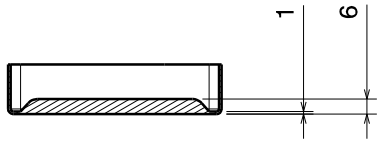

VIEW SECTION: A-A
Scale: 1:2

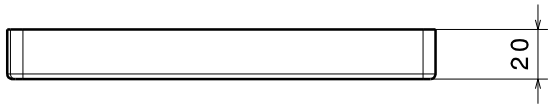

VIEW B
Scale: 1:2

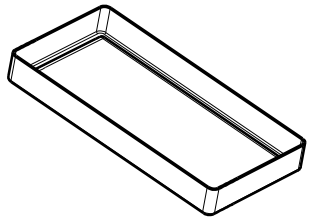

VIEW ISO
Scale: 1:3

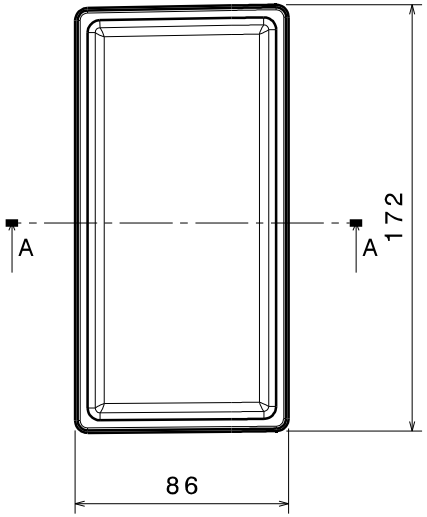

CAD SYSTEM: CATIA V5	FIRST ANGLE ROTATION	Spārna lonžerona riba	
DRAWN:	DATE		
CHECKED:	DATE		
STRESS:	DATE		
CFG:	DATE		
SYSTEM:	DATE	QUANTI1Y: 3	
MATERIALS: CARBON FIBER	DATE	IDENTIFY:	TOLERANCES:
PROCESSES:	DATE	REMOVE ALL SHARP EDGES R=0.2-0.4	RIVETS INST:
APPROVED:	DATE	ROUGHNESS:	BOLT INST:
AUTHORIZED:	DATE	BUSHING/BEARING INST.:	REF. 3D FILE: XX-

SCALE: 1:2 SHEET: 1/1 SIZE: A3
REV.

This drawing is S.I.A. PELEGRIN property and cannot be used in any way without written authorization

Kreisā spārna riba	rasējumā
Labā spārna riba	pretēji

DATE	REV	AUTHOR	DESCRIPTION

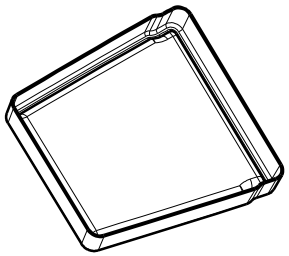

VIEW: ISO
Scale: 1:3

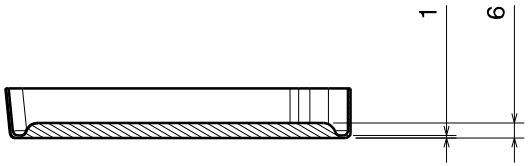

VIEW SECTION: A-A
Scale: 1:2

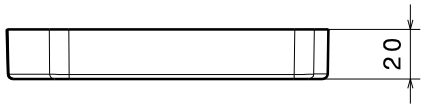

VIEW: B
Scale: 1:2

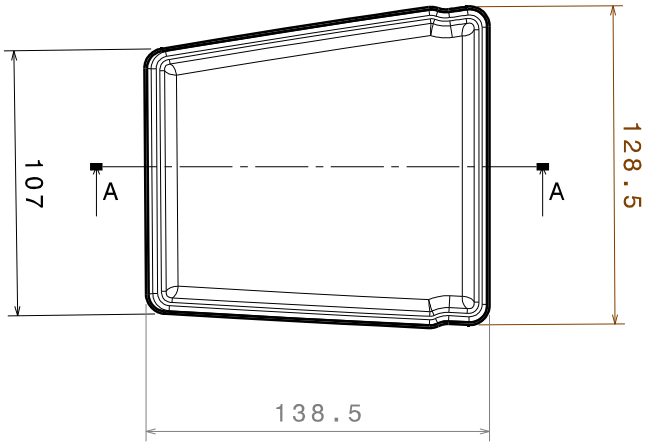

CAD SYSTEM: CATIA V5	FIRST ANGLE ROTATION	Spārna riba	DWG: SEE TABLE
DRAWN:	DATE		SCALE: 1:2 SHEET: 1/1 SIZE: A3
CHECKED:	DATE		REV.
STRESS:	DATE		
CFG:	DATE		
SYSTEM:	DATE	QUANTITY: 1+1	
MATERIALS: CARBON FIBER	DATE	IDENTIFY:	TOLERANCES:
PROCESSES:	DATE	REMOVE ALL SHARP EDGES R=0.2-0.4	RIVETS INST:
APPROVED:	DATE	ROUGHNESS:	BOLT INST:
AUTHORIZED:	DATE	BUSHING/BEARING INST.:	REF. 3D FILE: XX-

This drawing is S.I.A. PELEGRIN property and cannot be used in any way without written authorization

Kreisā spārna riba	rasējumā
Labā spārna riba	pretēji

DATE	REV	AUTHOR	DESCRIPTION



VIEW: A
Scale: 1:2

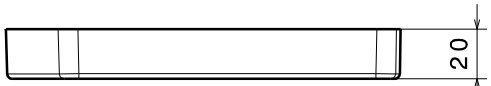

VIEW: B
Scale: 1:2

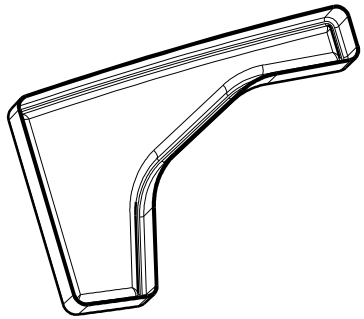

VIEW: ISO
Scale: 1:3

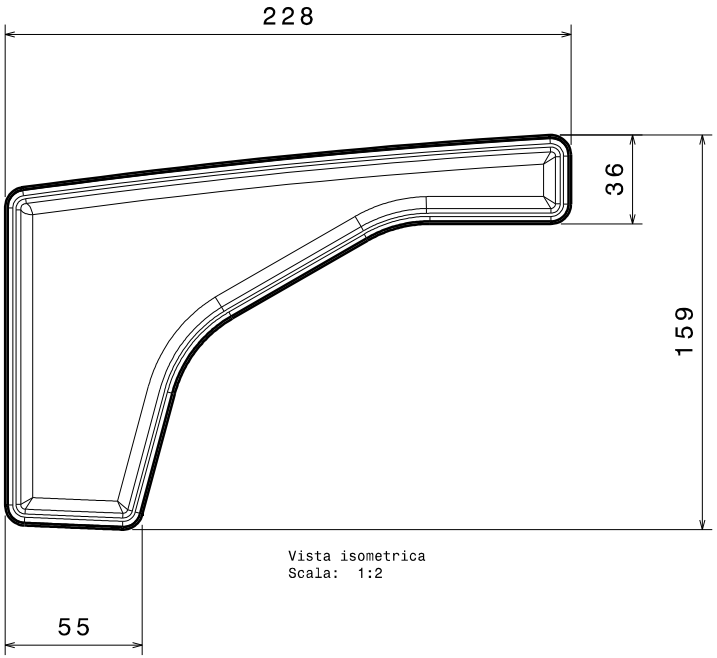

Vista isometrica
Scala: 1:2

CAD SYSTEM: CATIA V5	FIRST ANGLE ROTATION	Spārna riba	DWG SEE TABLE
DRAWN:	DATE		SCALE: 1:2 SHEET: 1/1 SIZE: A3
CHECKED:	DATE		REV.
STRESS:	DATE		
CFG:	DATE		
SYSTEM:	DATE	QUANTITY: 1+1	
MATERIALS: CARBON FIBER	DATE	IDENTIFY:	TOLERANCES:
PROCESSES:	DATE	REMOVE ALL SHARP EDGES R=0.2-0.4	RIVETS INST:
APPROVED:	DATE	ROUGHNESS:	BOLT INST:
AUTHORIZED:	DATE	BUSHING/BEARING INST.:	REF. 3D FILE: XX-

This drawing is S.I.A. PELEGRIN property and cannot be used in any way without written authorization

Kreisā spārna riba	rasējumā
Labā spārna riba	pretēji

DATE	REV	AUTHOR	DESCRIPTION

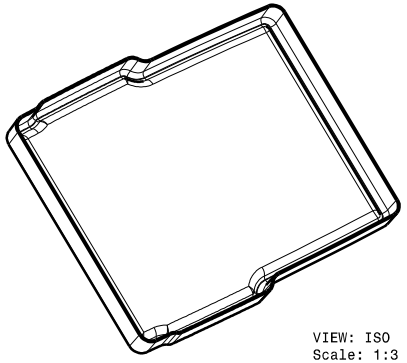

VIEW: ISO
Scale: 1:3

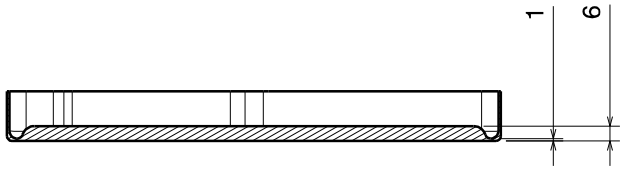

VIEW SECTION: A-A
Scale: 1:2

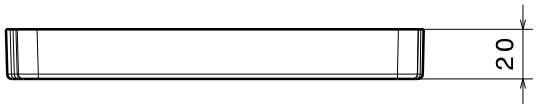

VIEW: B
Scale: 1:2

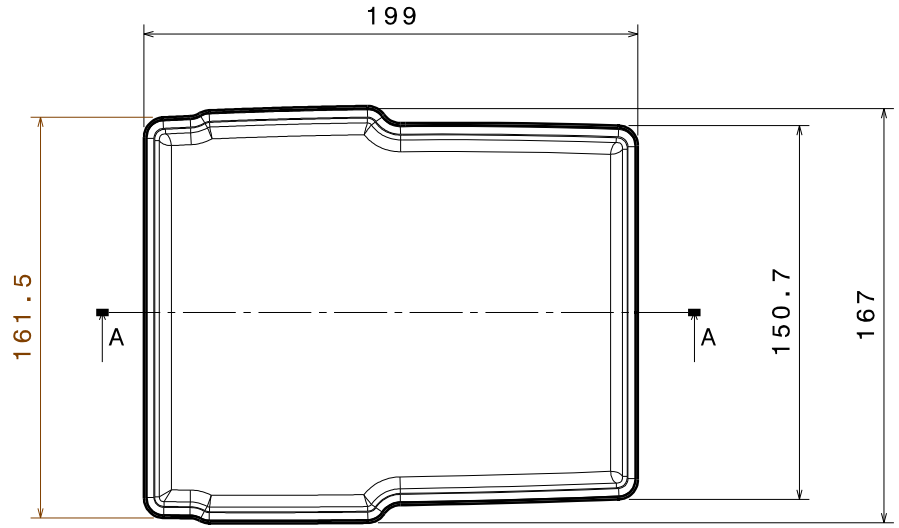

CAD SYSTEM: CATIA V5	FIRST ANGLE ROTATION	Spārna riba	DWG: SEE TABLE
DRAWN:	DATE		SCALE: 1:2 SHEET: 1/1 SIZE: A3
CHECKED:	DATE		REV.
STRESS:	DATE		
CFG:	DATE		
SYSTEM:	DATE	QUANTITY: 1+1	
MATERIALS: CARBON FIBER	DATE	IDENTIFY:	TOLERANCES:
PROCESSES:	DATE	REMOVE ALL SHARP EDGES R=0.2-0.4	RIVETS INST:
APPROVED:	DATE	ROUGHNESS:	BOLT INST:
AUTHORIZED:	DATE	BUSHING/BEARING INST.:	REF. 3D FILE: XX-

This drawing is S.I.A. PELEGRIN property and cannot be used in any way without written authorization

Kreisā spārna riba	rasējumā
Labā spārna riba	pretēji

DATE	REV	AUTHOR	DESCRIPTION

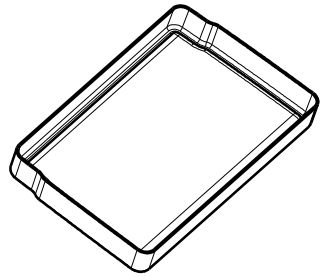

VIEW: ISO
Scale: 1:3

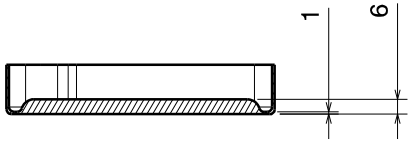

VIEW SECTION: A-A
Scale: 1:2

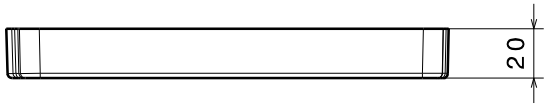

VIEW: B
Scala: 1:2

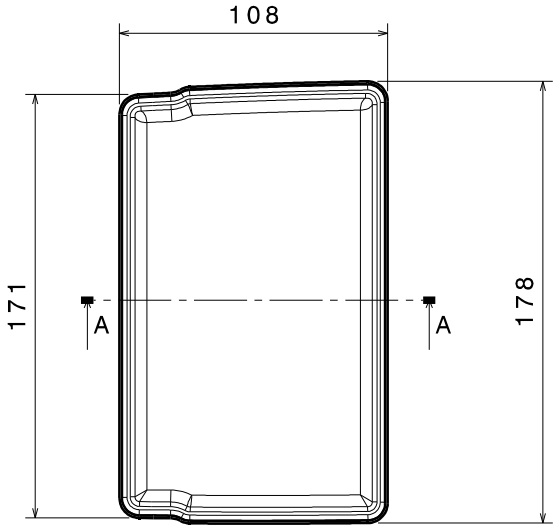

CAD SYSTEM: CATIA V5	FIRST ANGLE ROTATION	Spārna riba	DWG SEE TABLE
DRAWN:	DATE		SCALE: 1:2 SHEET: 1/1 SIZE: A3
CHECKED:	DATE		REV.
STRESS:	DATE		
CFG:	DATE		
SYSTEM:	DATE	QUANTI1Y: 1+1	
MATERIALS: CARBON FIBER	DATE	IDENTIFY:	TOLERANCES:
PROCESSES:	DATE	REMOVE ALL SHARP EDGES R=0.2-0.4	RIVETS INST:
APPROVED:	DATE	ROUGHNESS:	BOLT INST:
AUTHORIZED:	DATE	BUSHING/BEARING INST.:	REF. 3D FILE: XX-

This drawing is S.I.A. PELEGRIN property and cannot be used in any way without written authorization

Kreisā spārna riba	rasējumā
Labā spārna riba	pretēji

DATE	REV	AUTHOR	DESCRIPTION

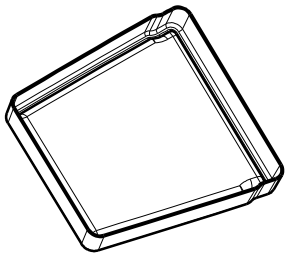

VIEW: ISO
Scale: 1:3

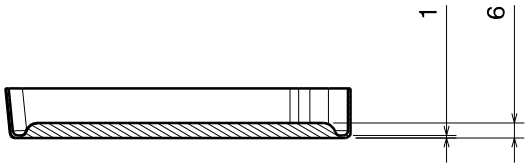

VIEW SECTION: A-A
Scale: 1:2

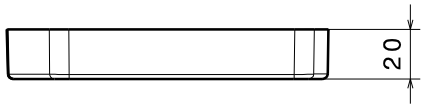

VIEW: B
Scale: 1:2

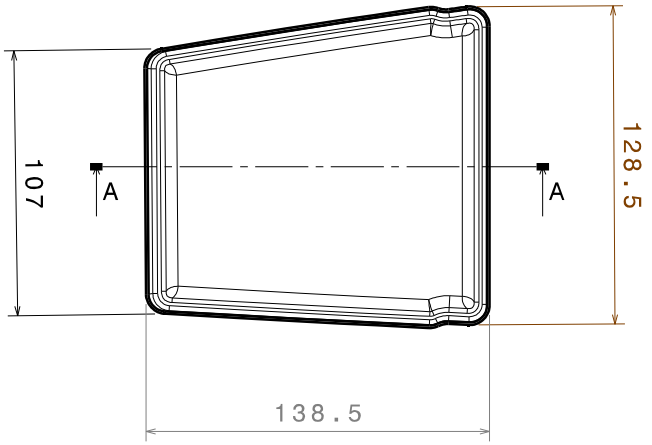

CAD SYSTEM: CATIA V5	FIRST ANGLE ROTATION	Spārna riba	DWG: SEE TABLE
DRAWN:	DATE		SCALE: 1:2 SHEET: 1/1 SIZE: A3
CHECKED:	DATE		REV.
STRESS:	DATE		
CFG:	DATE		
SYSTEM:	DATE	QUANTITY: 1+1	
MATERIALS: CARBON FIBER	DATE	IDENTIFY:	TOLERANCES:
PROCESSES:	DATE	REMOVE ALL SHARP EDGES R=0.2-0.4	RIVETS INST:
APPROVED:	DATE	ROUGHNESS:	BOLT INST:
AUTHORIZED:	DATE	BUSHING/BEARING INST.:	REF. 3D FILE: XX-

This drawing is S.I.A. PELEGRIN property and cannot be used in any way without written authorization

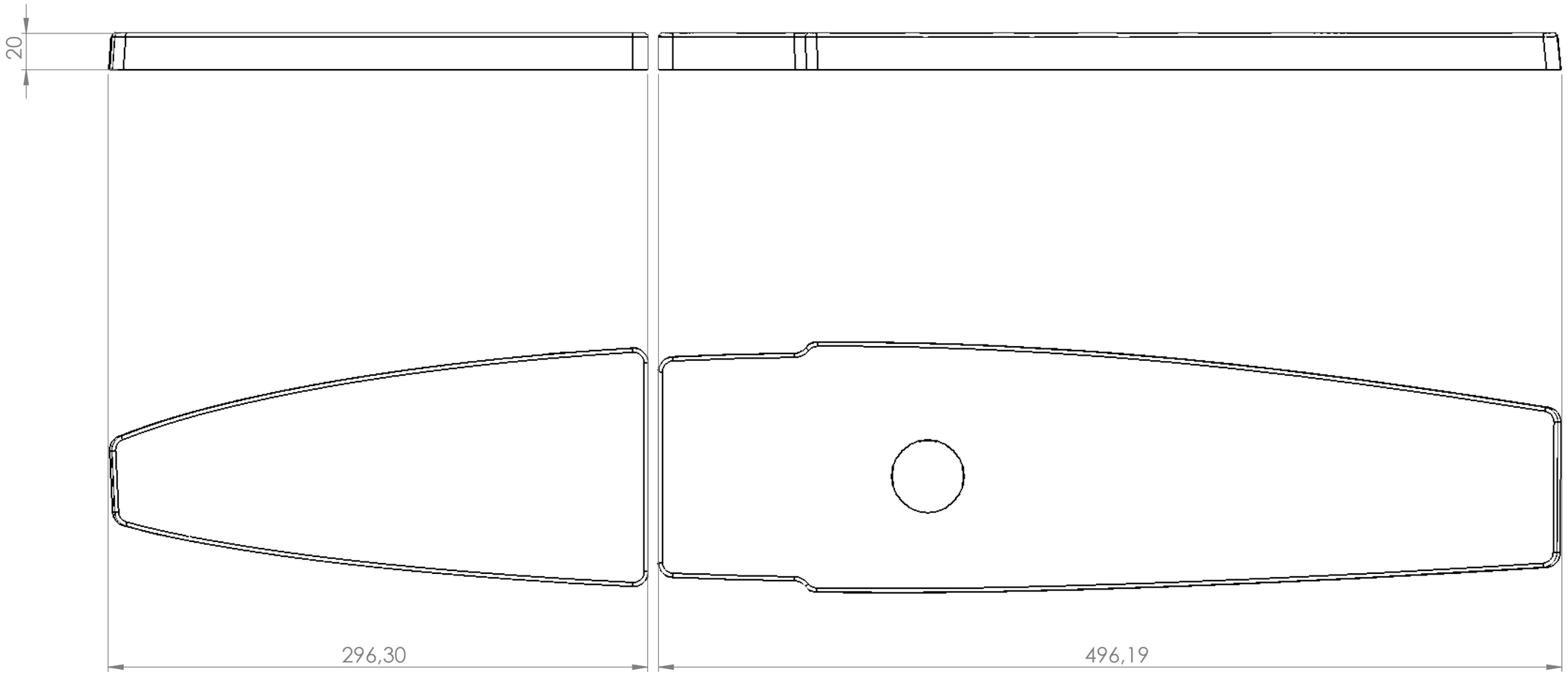

Labā Spārna Ribas ir spoguļattēlā

UNLESS OTHERWISE SPECIFIED: DIMENSIONS ARE IN MILLIMETERS SURFACE FINISH: TOLERANCES: LINEAR: ANGULAR:	FINISH:		DEBURR AND BREAK SHARP EDGES	DO NOT SCALE DRAWING	REVISION	
	NAME	SIGNATURE	DATE	TITLE:		
DRAWN				Kreisā Spārna ribas		
CHK'D						
APPV'D						
MFG						
Q.A				MATERIAL:	DWG NO.	A3
				WEIGHT:	SCALE:1:5	SHEET 1 OF 1

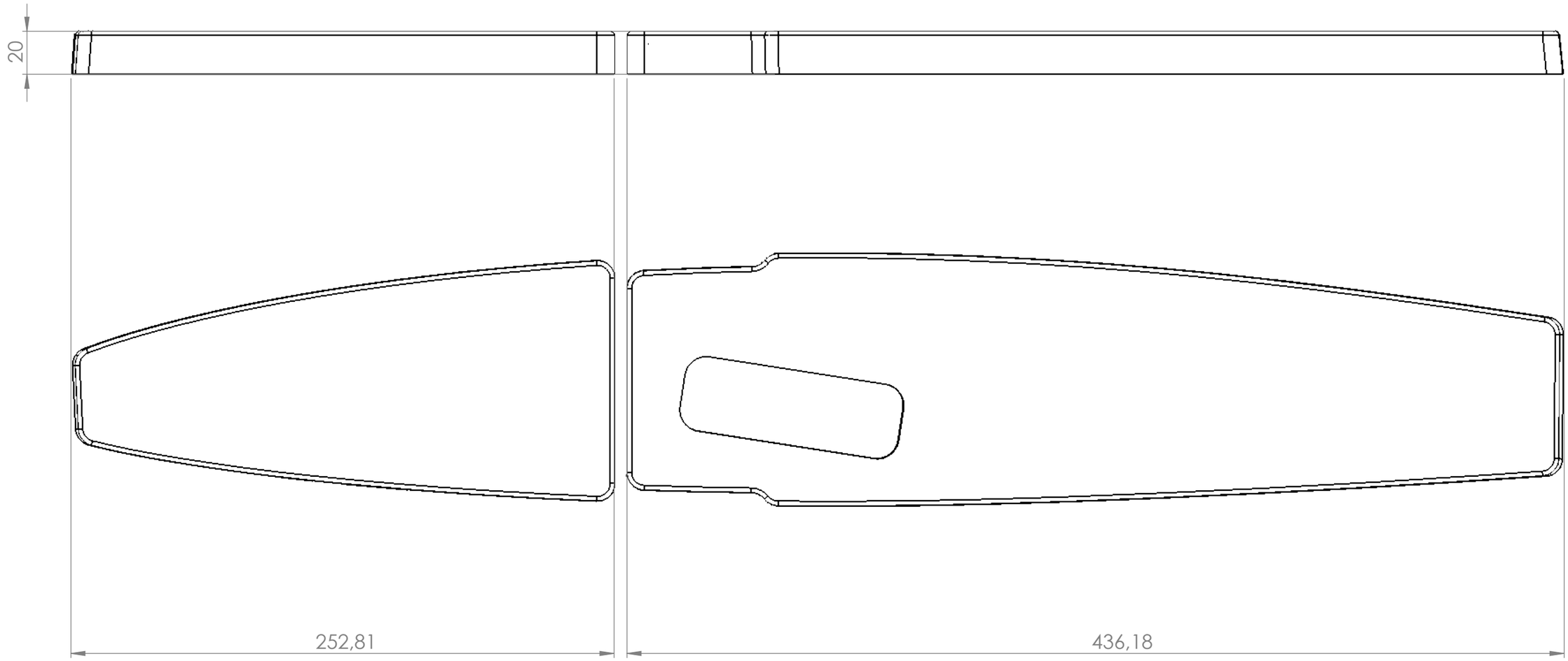

Labā Spārna Ribas ir spoguļattēlā

UNLESS OTHERWISE SPECIFIED: DIMENSIONS ARE IN MILLIMETERS SURFACE FINISH: TOLERANCES: LINEAR: ANGULAR:		FINISH:			DEBURR AND BREAK SHARP EDGES	DO NOT SCALE DRAWING	REVISION
	NAME	SIGNATURE	DATE			TITLE:	
DRAWN						Kreisā Spārna ribas	
CHK'D							
APPV'D							
MFG							
Q.A				MATERIAL:		DWG NO.	A3
				WEIGHT:		SCALE:1:5	SHEET 1 OF 1

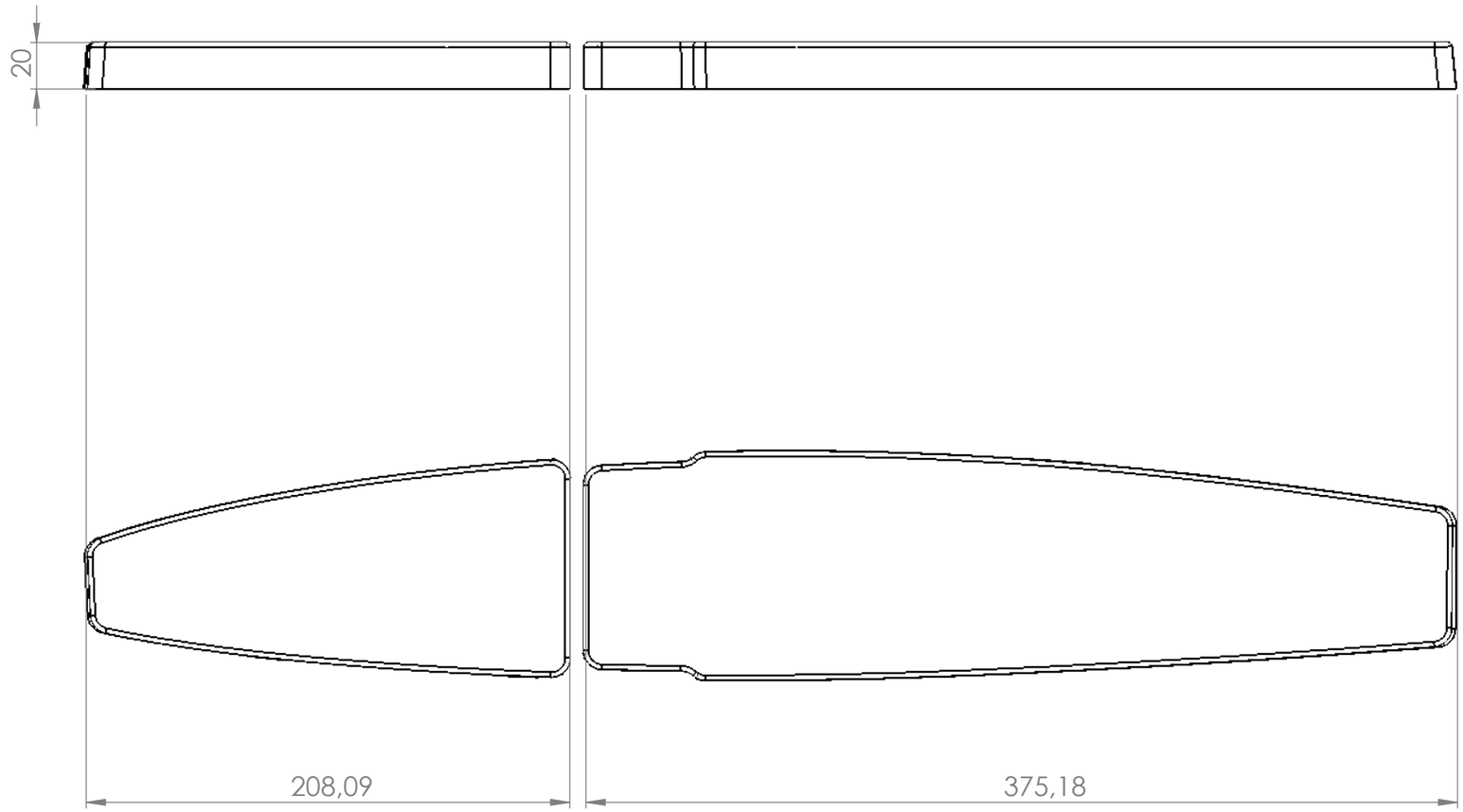

Labā Spārna Ribas ir spoguļattēlā

UNLESS OTHERWISE SPECIFIED: DIMENSIONS ARE IN MILLIMETERS SURFACE FINISH: TOLERANCES: LINEAR: ANGULAR:	FINISH:		DEBURR AND BREAK SHARP EDGES	DO NOT SCALE DRAWING	REVISION	
	NAME	SIGNATURE	DATE	TITLE:		
DRAWN				Kreisā Spārna ribas		
CHK'D						
APPV'D						
MFG						
Q.A				MATERIAL:	DWG NO.	A3
				WEIGHT:	SCALE:1:5	SHEET 1 OF 1

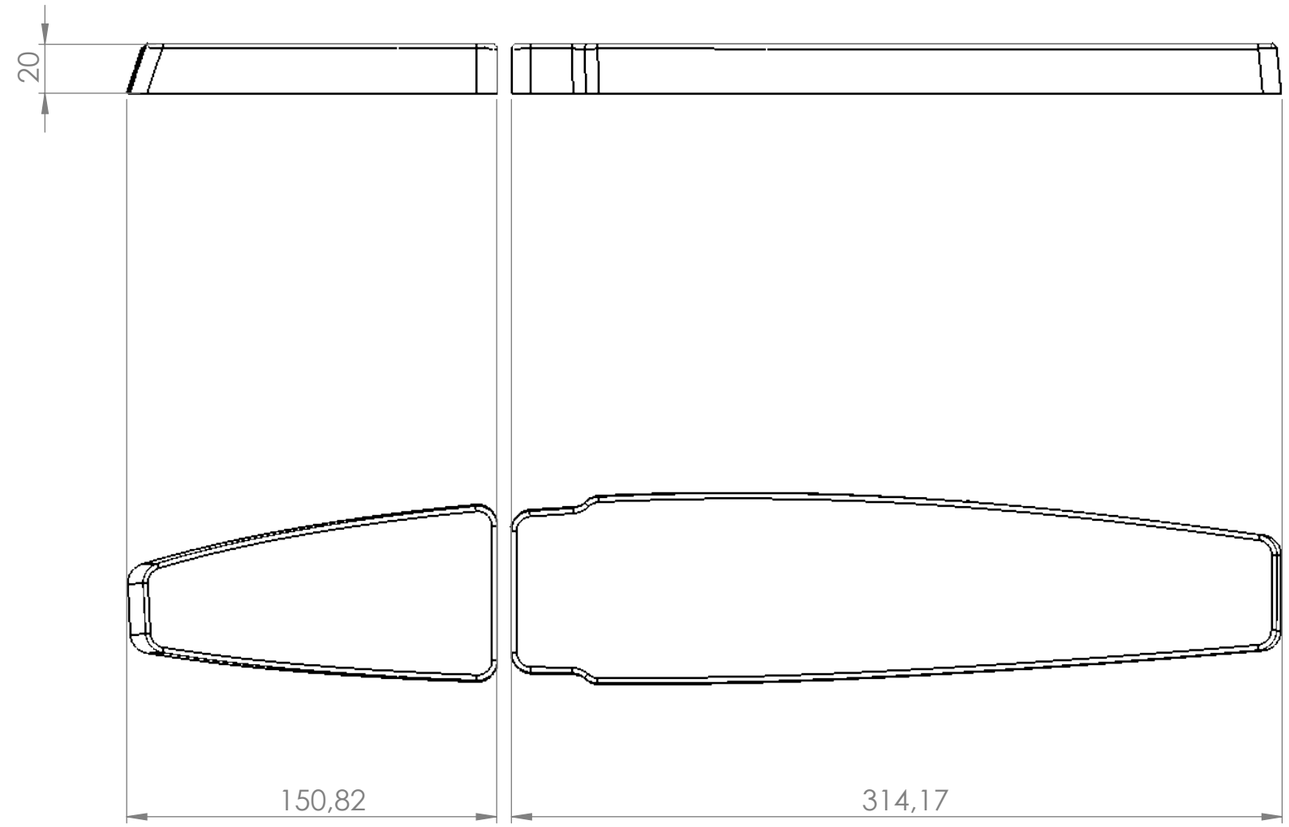

Labā Spārna Ribas ir spoguļattēlā

UNLESS OTHERWISE SPECIFIED: DIMENSIONS ARE IN MILLIMETERS SURFACE FINISH: TOLERANCES: LINEAR: ANGULAR:	FINISH:		DEBURR AND BREAK SHARP EDGES	DO NOT SCALE DRAWING	REVISION	
	NAME	SIGNATURE	DATE	TITLE:		
DRAWN				Kreisā Spārna ribas		
CHK'D						
APPV'D						
MFG						
Q.A				MATERIAL:	DWG NO.	A3
				WEIGHT:	SCALE:1:5	SHEET 1 OF 1

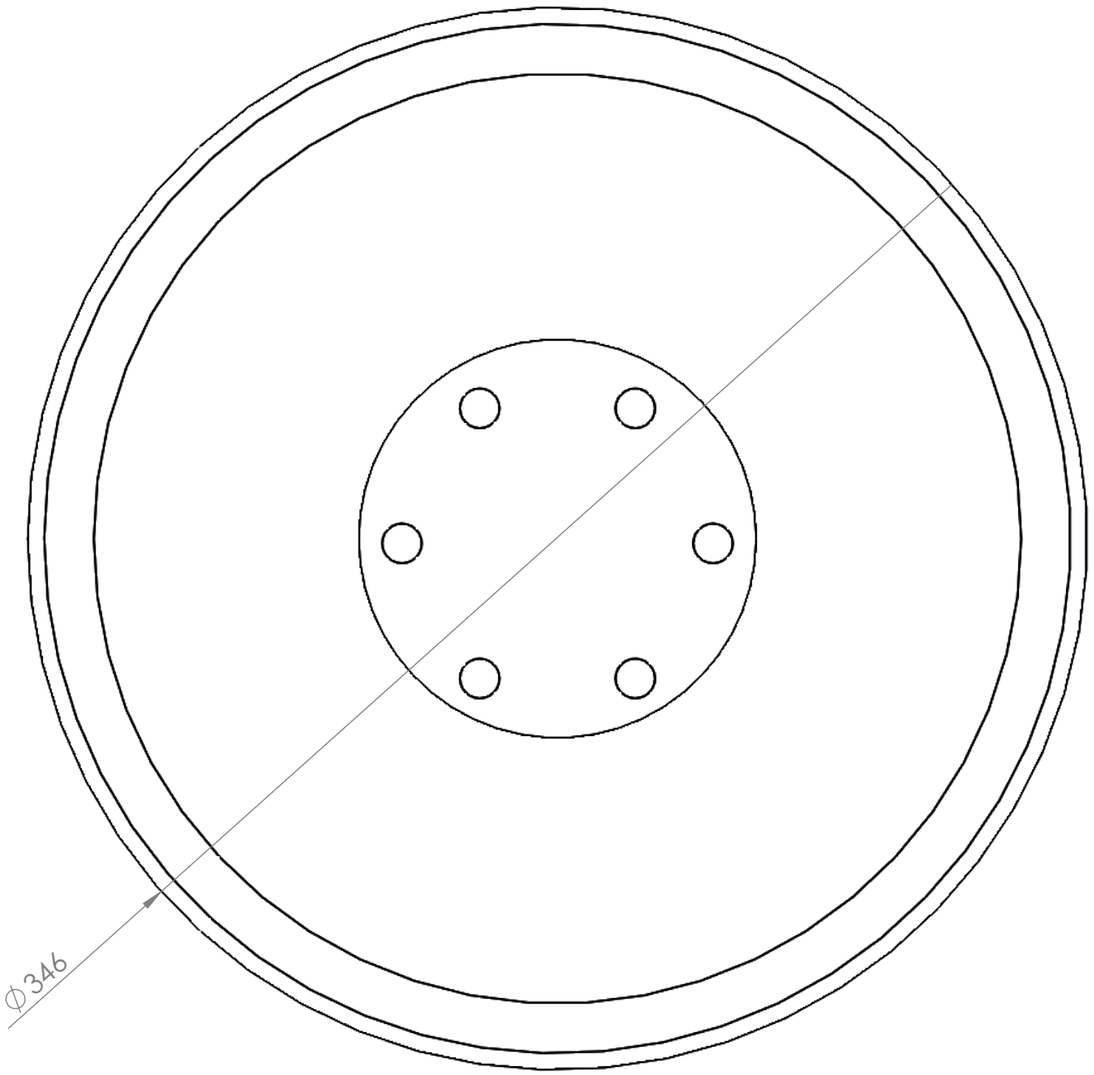

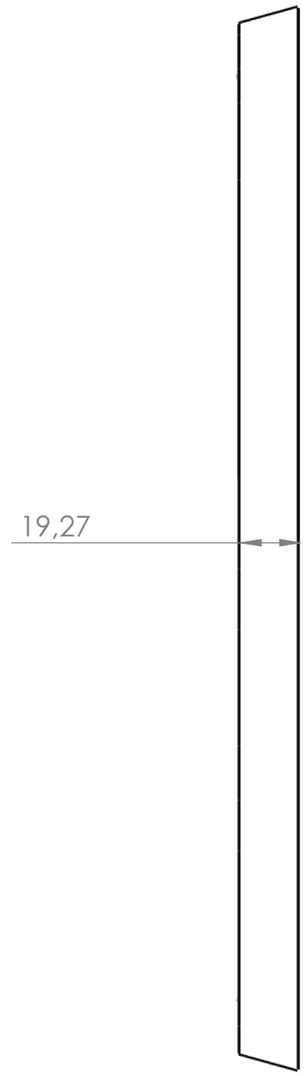

UNLESS OTHERWISE SPECIFIED: DIMENSIONS ARE IN MILLIMETERS SURFACE FINISH: TOLERANCES: LINEAR: ANGULAR:	FINISH:		DEBURR AND BREAK SHARP EDGES	DO NOT SCALE DRAWING	REVISION		
	NAME	SIGNATURE	DATE			TITLE: Spinera plāksne	
DRAWN							
CHK'D							
APPV'D							
MFG							
Q.A				MATERIAL:		DWG NO.	A3
				WEIGHT:		SCALE:1:5	SHEET 1 OF 1

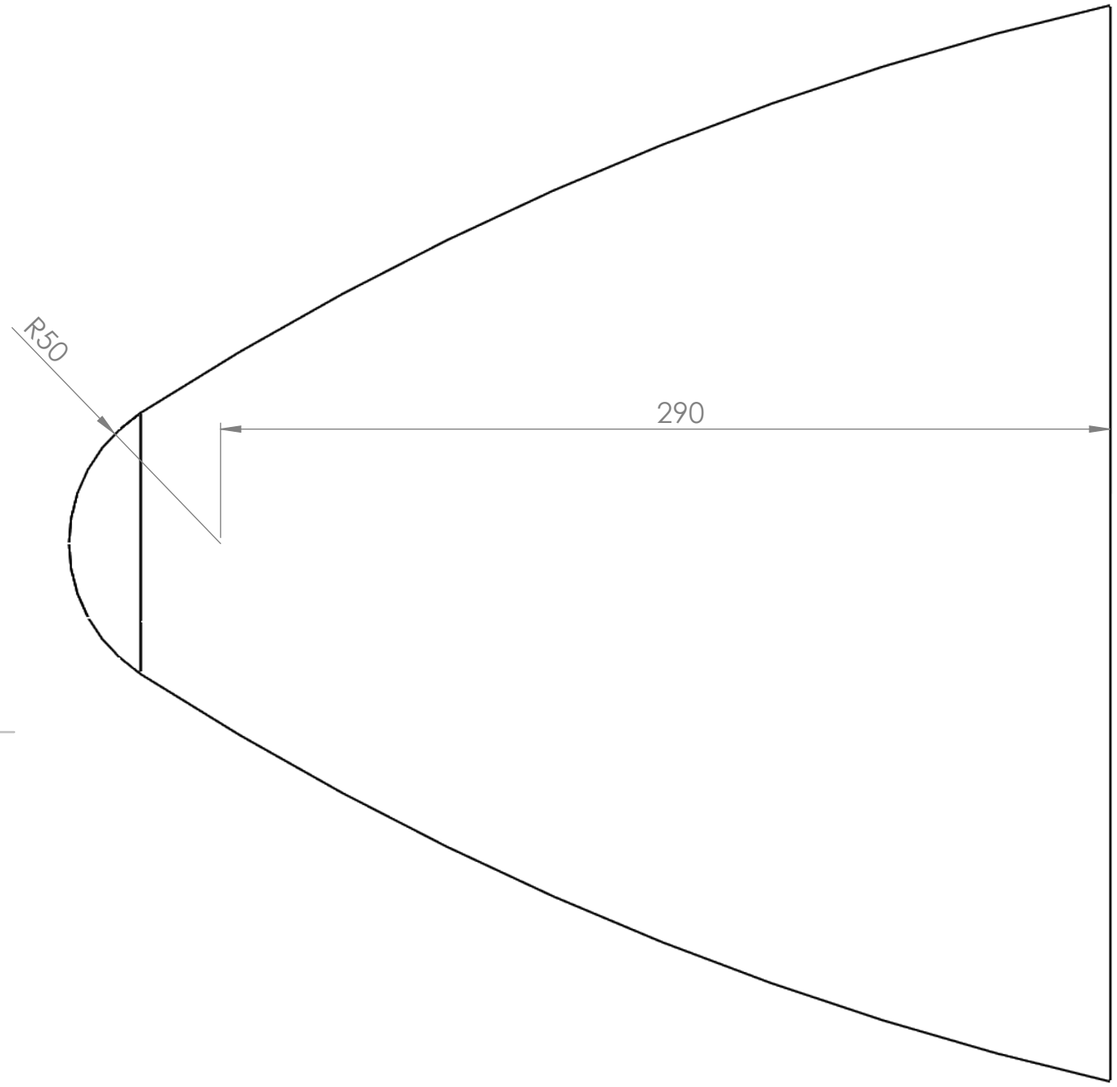

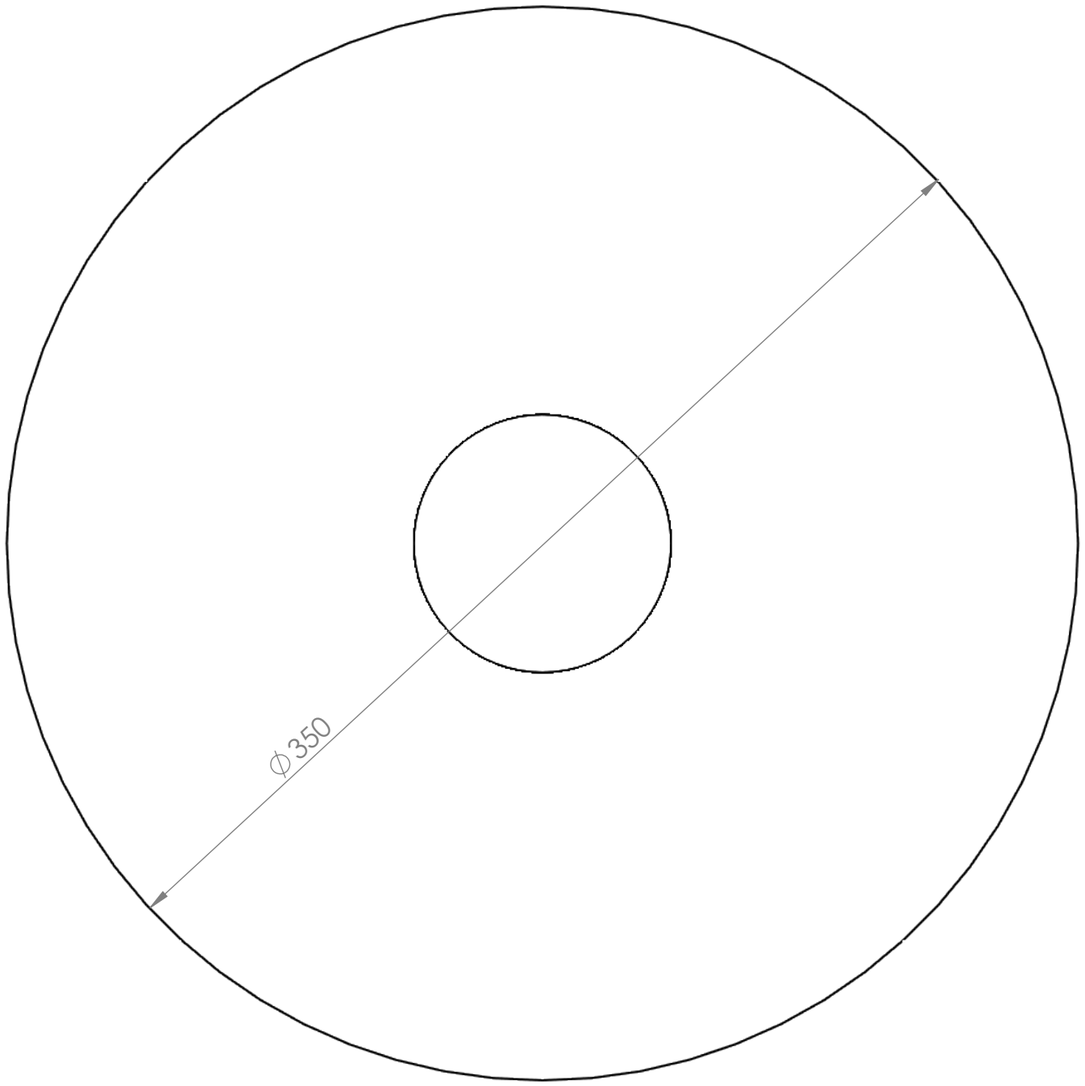

UNLESS OTHERWISE SPECIFIED: DIMENSIONS ARE IN MILLIMETERS SURFACE FINISH: TOLERANCES: LINEAR: ANGULAR:		FINISH:			DEBURR AND BREAK SHARP EDGES	DO NOT SCALE DRAWING	REVISION
	NAME	SIGNATURE	DATE			TITLE:	
DRAWN						Spineris	
CHK'D							
APPV'D							
MFG							
Q.A				MATERIAL:		DWG NO.	A3
				WEIGHT:		SCALE:1:5	SHEET 1 OF 1

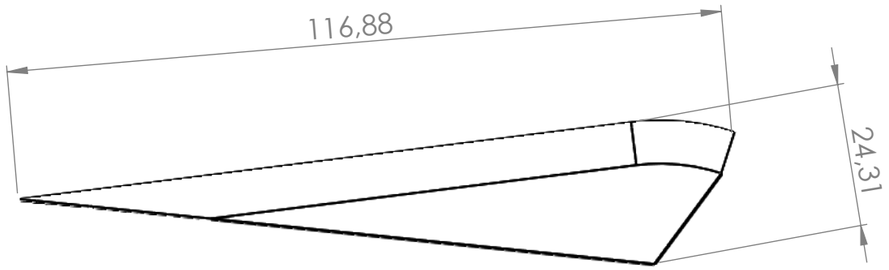

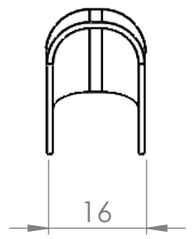

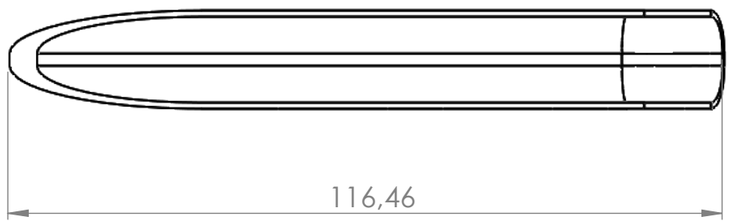

UNLESS OTHERWISE SPECIFIED: DIMENSIONS ARE IN MILLIMETERS SURFACE FINISH: TOLERANCES: LINEAR: ANGULAR:	FINISH:				DEBURR AND BREAK SHARP EDGES	DO NOT SCALE DRAWING	REVISION
	NAME	SIGNATURE	DATE			TITLE: Trimera kronšteina nosegdetaļa	
DRAWN							
CHK'D							
APPV'D							
MFG							
Q.A				MATERIAL:		DWG NO.	A3
				WEIGHT:		SCALE:1:1	SHEET 1 OF 1

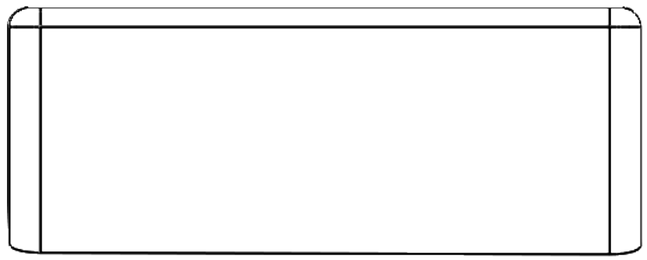

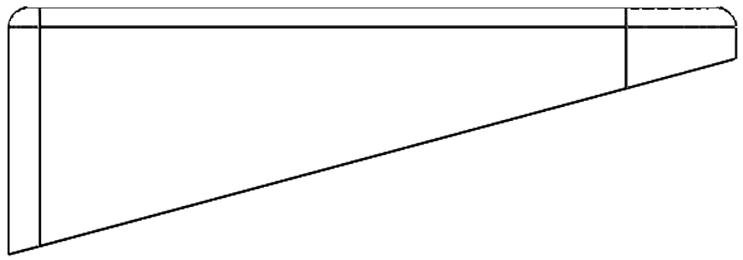

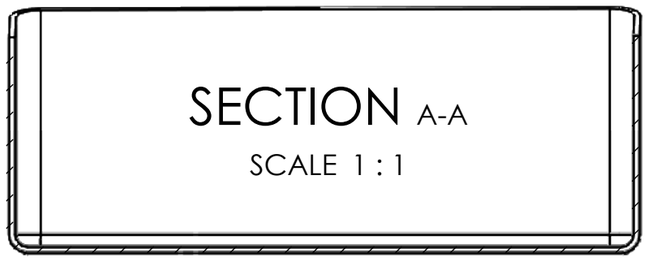

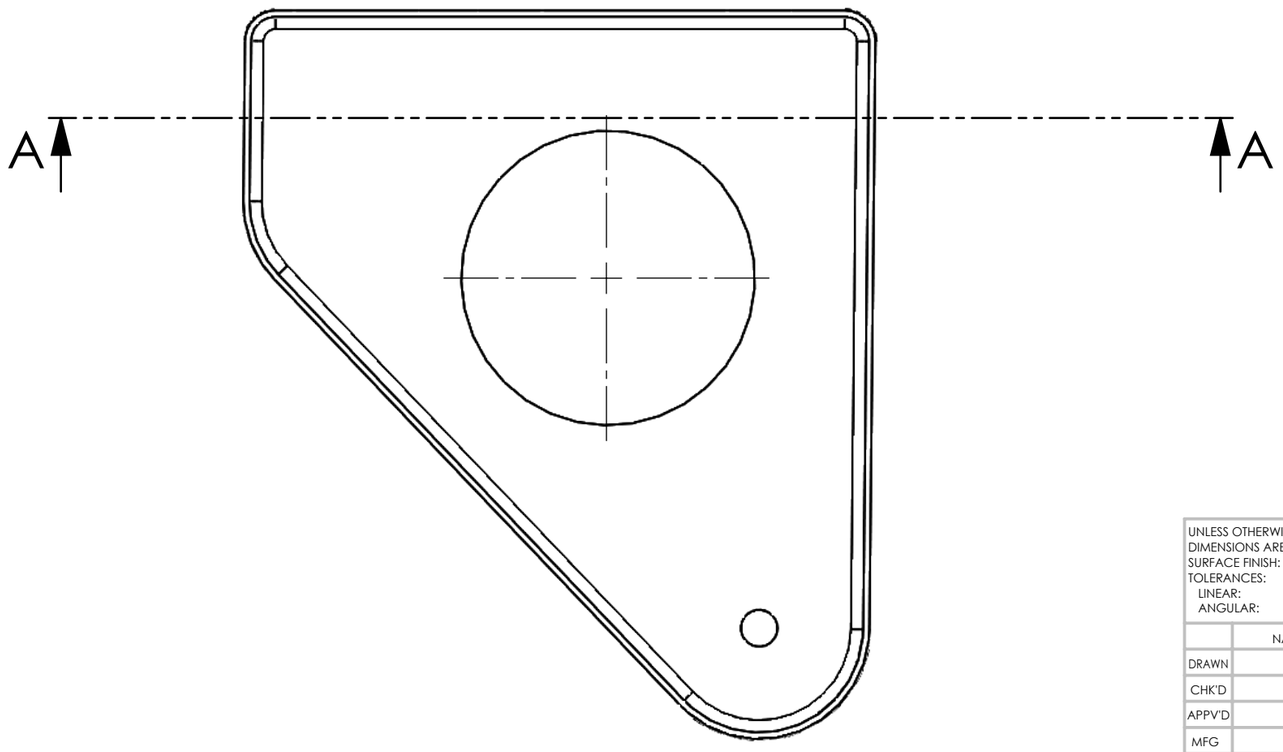

Labais vadības atbalsta kronšteins ir spoguļattēlā

UNLESS OTHERWISE SPECIFIED: DIMENSIONS ARE IN MILLIMETERS SURFACE FINISH: TOLERANCES: LINEAR: ANGULAR:		FINISH:			DEBURR AND BREAK SHARP EDGES	DO NOT SCALE DRAWING	REVISION
	NAME	SIGNATURE	DATE			TITLE: Kreisais vadības atbalsta kronšteins	
DRAWN							
CHK'D							
APPV'D							
MFG							
Q.A				MATERIAL:		DWG NO.	A3
				WEIGHT:		SCALE:1:2	SHEET 1 OF 1

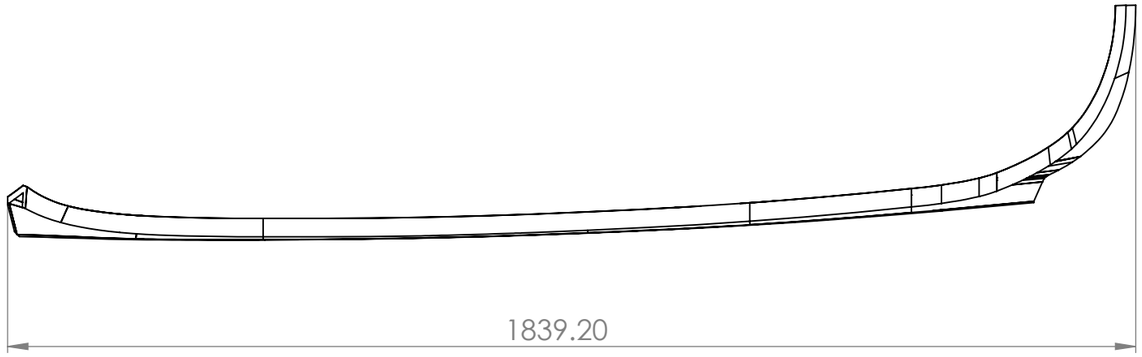

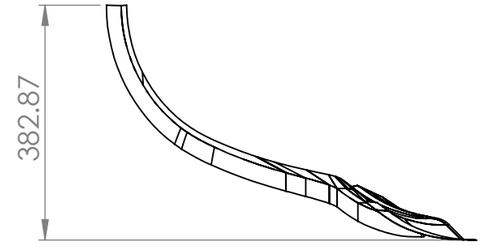

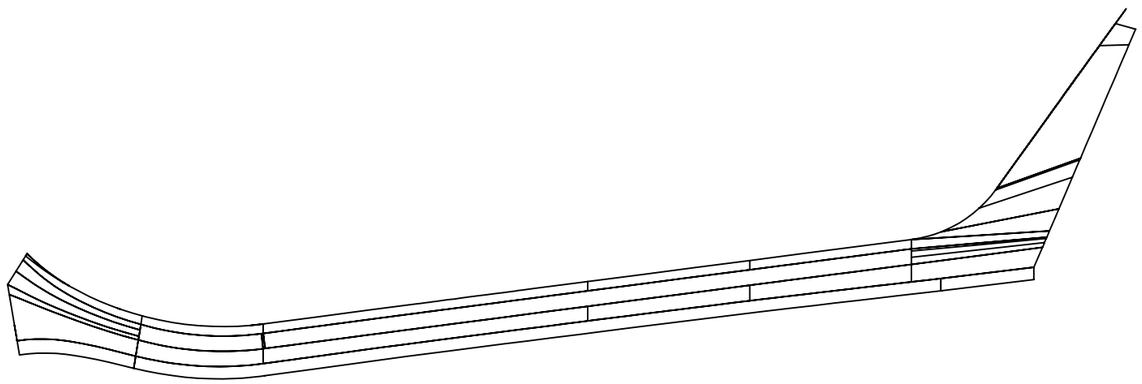

Labais vējstikla lonžerons ir spoguļattēlā

UNLESS OTHERWISE SPECIFIED: DIMENSIONS ARE IN MILLIMETERS SURFACE FINISH: TOLERANCES: LINEAR: ANGULAR:		FINISH:				DEBURR AND BREAK SHARP EDGES	DO NOT SCALE DRAWING	REVISION
	NAME	SIGNATURE	DATE				TITLE: Kreisais vējstikla lonžerons	
DRAWN								
CHK'D								
APPV'D								
MFG								
Q.A				MATERIAL:			DWG NO.	A3
				WEIGHT:			SCALE:1:20	SHEET 1 OF 1

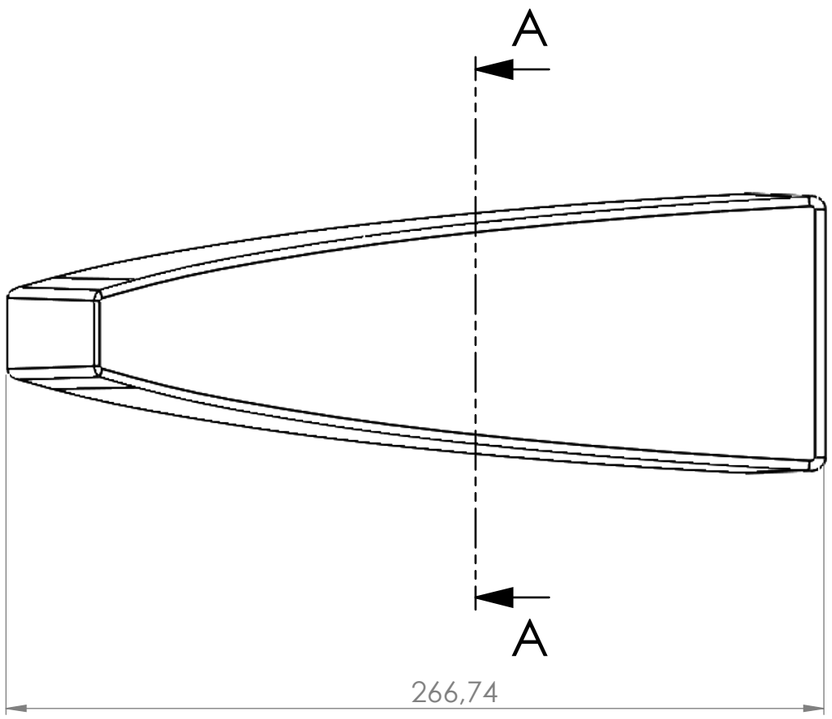

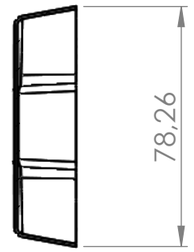

SECTION A-A

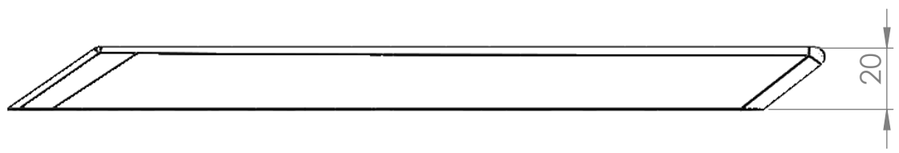

UNLESS OTHERWISE SPECIFIED: DIMENSIONS ARE IN MILLIMETERS SURFACE FINISH: TOLERANCES: LINEAR: ANGULAR:		FINISH:			DEBURR AND BREAK SHARP EDGES	DO NOT SCALE DRAWING	REVISION
	NAME	SIGNATURE	DATE			TITLE: Vertikālā stabilizatora aizmugurējā riba	
DRAWN							
CHK'D							
APPV'D							
MFG							
Q.A				MATERIAL:		DWG NO.	A3
				WEIGHT:		SCALE:1:2	SHEET 1 OF 1

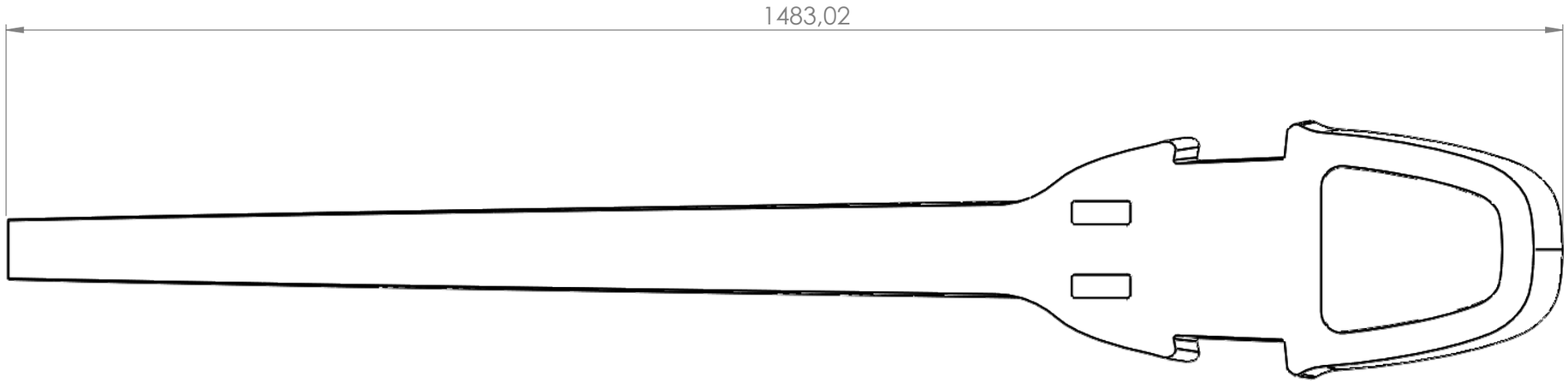

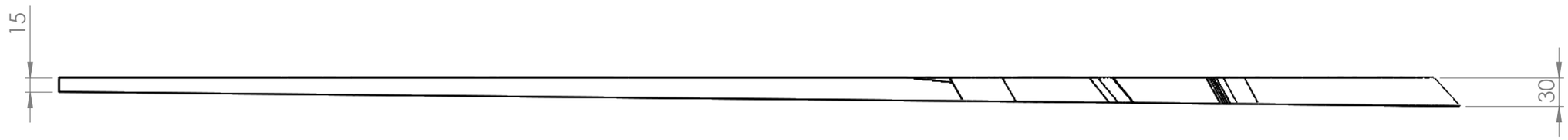

UNLESS OTHERWISE SPECIFIED: DIMENSIONS ARE IN MILLIMETERS SURFACE FINISH: TOLERANCES: LINEAR: ANGULAR:		FINISH:			DEBURR AND BREAK SHARP EDGES	DO NOT SCALE DRAWING	REVISION
	NAME	SIGNATURE	DATE			TITLE: Vertikālā stabilizātora aizmugurējais lonžerons	
DRAWN							
CHK'D							
APPV'D							
MFG							
Q.A				MATERIAL:		DWG NO.	A3
				WEIGHT:		SCALE:1:10	SHEET 1 OF 1

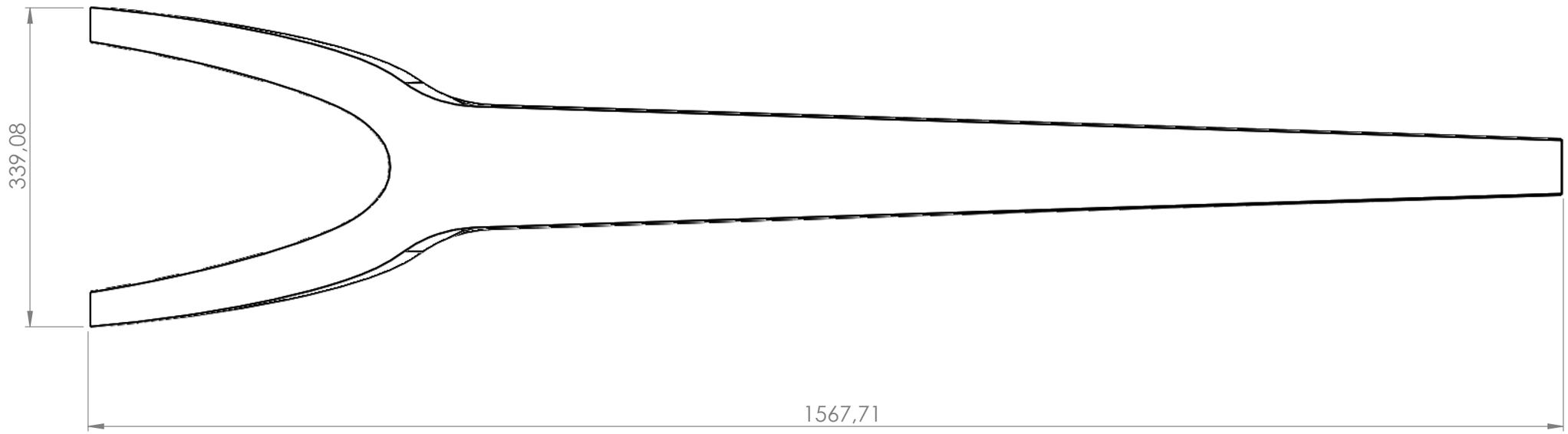

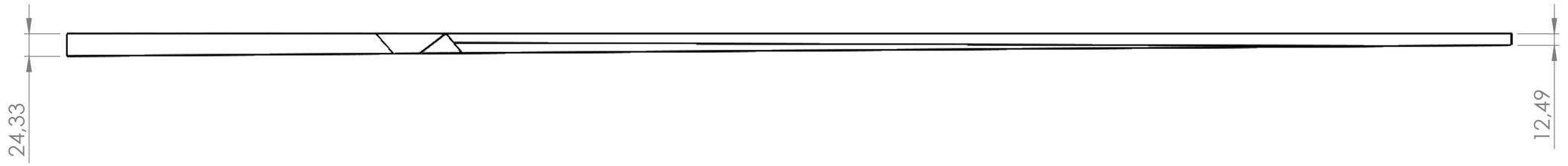

UNLESS OTHERWISE SPECIFIED: DIMENSIONS ARE IN MILLIMETERS SURFACE FINISH: TOLERANCES: LINEAR: ANGULAR:	FINISH:				DEBURR AND BREAK SHARP EDGES	DO NOT SCALE DRAWING	REVISION
	NAME	SIGNATURE	DATE			TITLE: Vertikālā stabilizatora priekšējais lonžerons	
DRAWN							
CHK'D							
APPV'D							
MFG							
Q.A				MATERIAL:		DWG NO.	A3
				WEIGHT:		SCALE:1:10	SHEET 1 OF 1

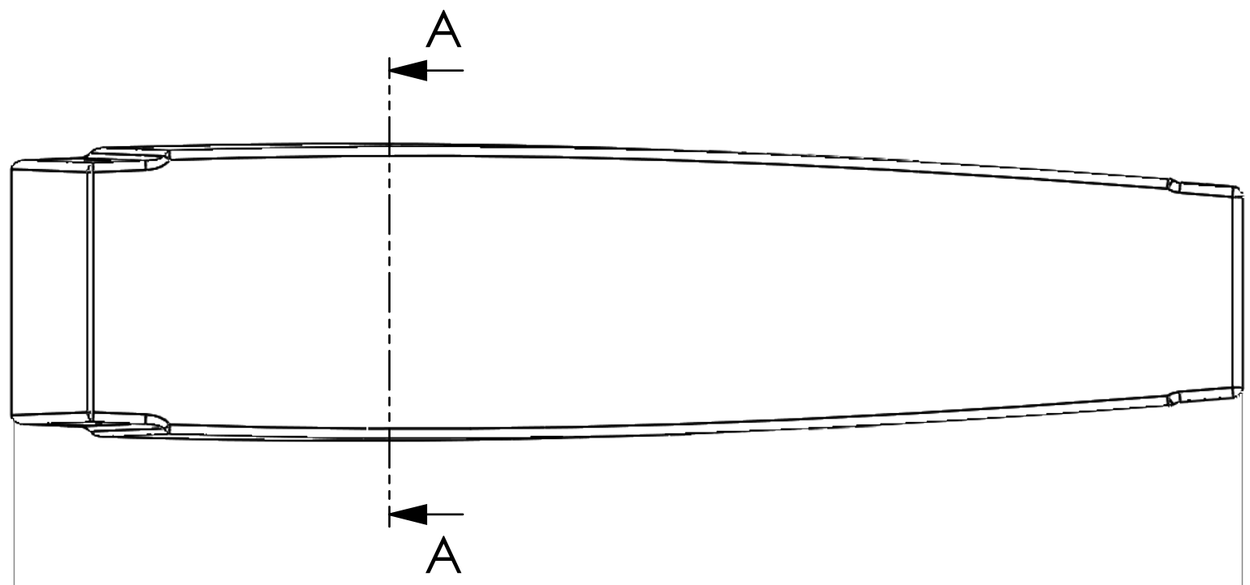

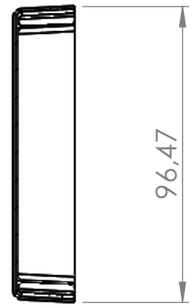

SECTION A-A

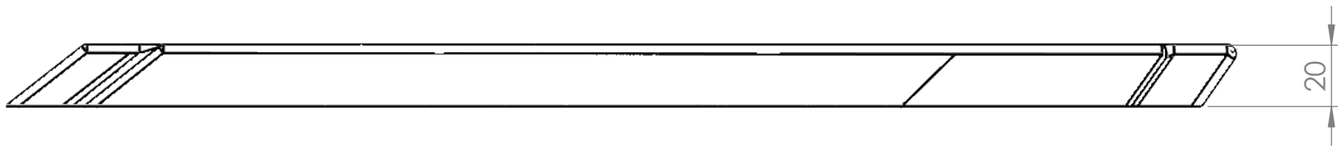

UNLESS OTHERWISE SPECIFIED: DIMENSIONS ARE IN MILLIMETERS SURFACE FINISH: TOLERANCES: LINEAR: ANGULAR:		FINISH:			DEBURR AND BREAK SHARP EDGES	DO NOT SCALE DRAWING	REVISION
	NAME	SIGNATURE	DATE			TITLE: Vertikālā stabilizatora riba	
DRAWN							
CHK'D							
APPV'D							
MFG							
Q.A				MATERIAL:		DWG NO.	A3
				WEIGHT:		SCALE:1:2	SHEET 1 OF 1

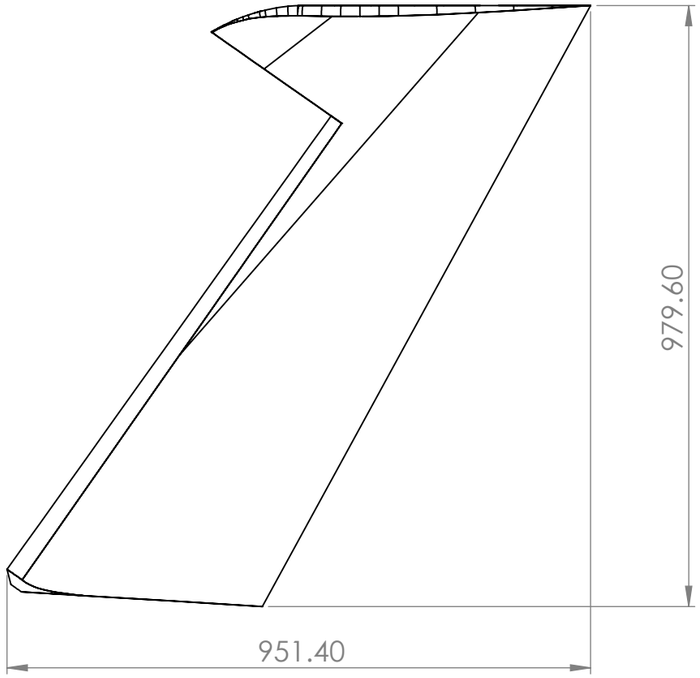



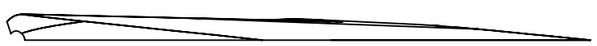

UNLESS OTHERWISE SPECIFIED: DIMENSIONS ARE IN MILLIMETERS SURFACE FINISH: TOLERANCES: LINEAR: ANGULAR:		FINISH:			DEBURR AND BREAK SHARP EDGES	DO NOT SCALE DRAWING	REVISION
	NAME	SIGNATURE	DATE			TITLE: Virzienstūres kreisā čaula	
DRAWN							
CHK'D							
APPV'D							
MFG							
Q.A				MATERIAL:		DWG NO.	A3
				WEIGHT:		SCALE:1:10	SHEET 1 OF 1

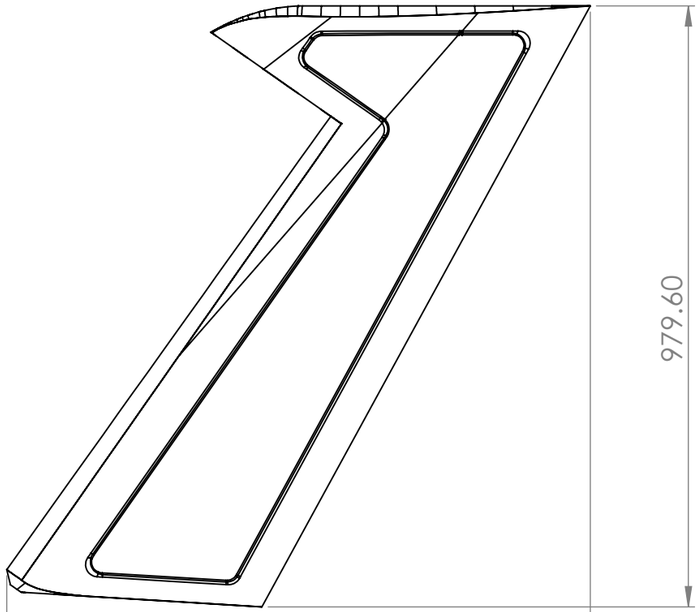

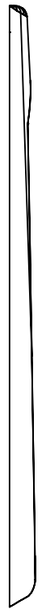

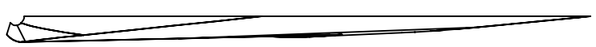

UNLESS OTHERWISE SPECIFIED: DIMENSIONS ARE IN MILLIMETERS SURFACE FINISH: TOLERANCES: LINEAR: ANGULAR:		FINISH:		DEBURR AND BREAK SHARP EDGES		DO NOT SCALE DRAWING	REVISION
	NAME	SIGNATURE	DATE			TITLE: Virzienstūres labā čaula	
DRAWN							
CHK'D							
APPV'D							
MFG							
Q.A				MATERIAL:		DWG NO.	A3
				WEIGHT:		SCALE:1:10	SHEET 1 OF 1

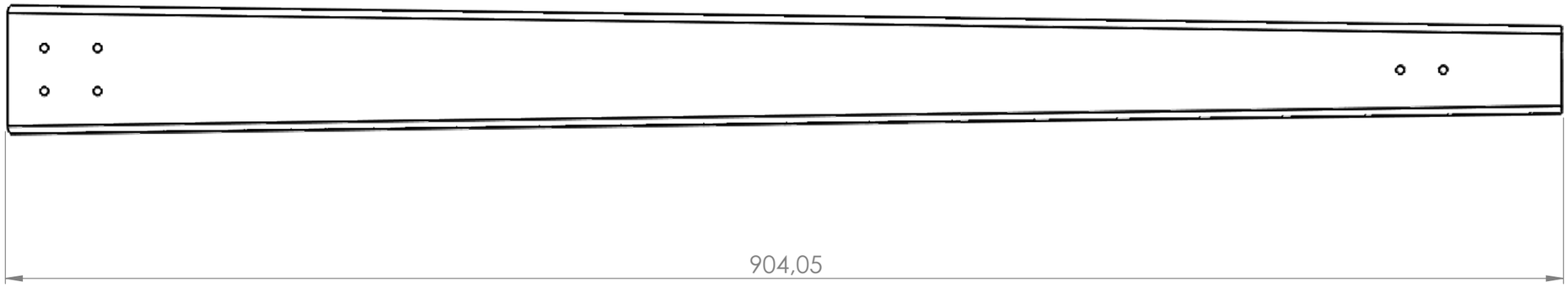

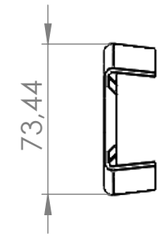

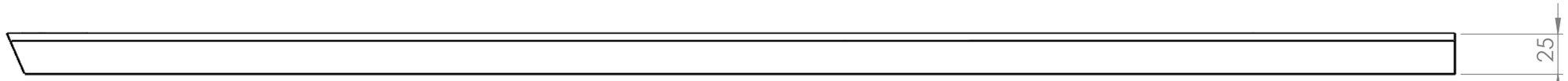

UNLESS OTHERWISE SPECIFIED: DIMENSIONS ARE IN MILLIMETERS SURFACE FINISH: TOLERANCES: LINEAR: ANGULAR:	FINISH:					DEBURR AND BREAK SHARP EDGES	DO NOT SCALE DRAWING / REVISION
	NAME	SIGNATURE	DATE				TITLE: Virzienstūres lonžerons
DRAWN							
CHK'D							
APPV'D							
MFG							
Q.A				MATERIAL:			DWG NO. / A3
				WEIGHT:		SCALE:1:10	SHEET 1 OF 1

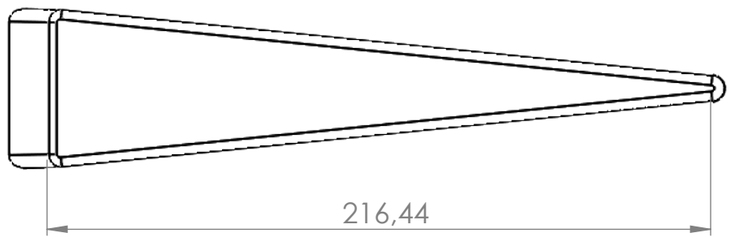

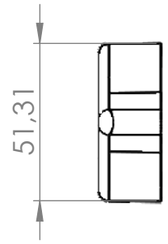

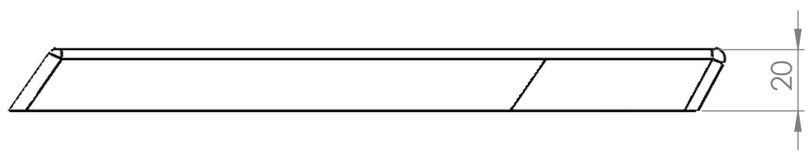

UNLESS OTHERWISE SPECIFIED: DIMENSIONS ARE IN MILLIMETERS SURFACE FINISH: TOLERANCES: LINEAR: ANGULAR:		FINISH:			DEBURR AND BREAK SHARP EDGES	DO NOT SCALE DRAWING	REVISION
	NAME	SIGNATURE	DATE			TITLE: Virzienstūres riba	
DRAWN							
CHK'D							
APPV'D							
MFG							
Q.A				MATERIAL:		DWG NO.	A3
				WEIGHT:		SCALE:1:2	SHEET 1 OF 1